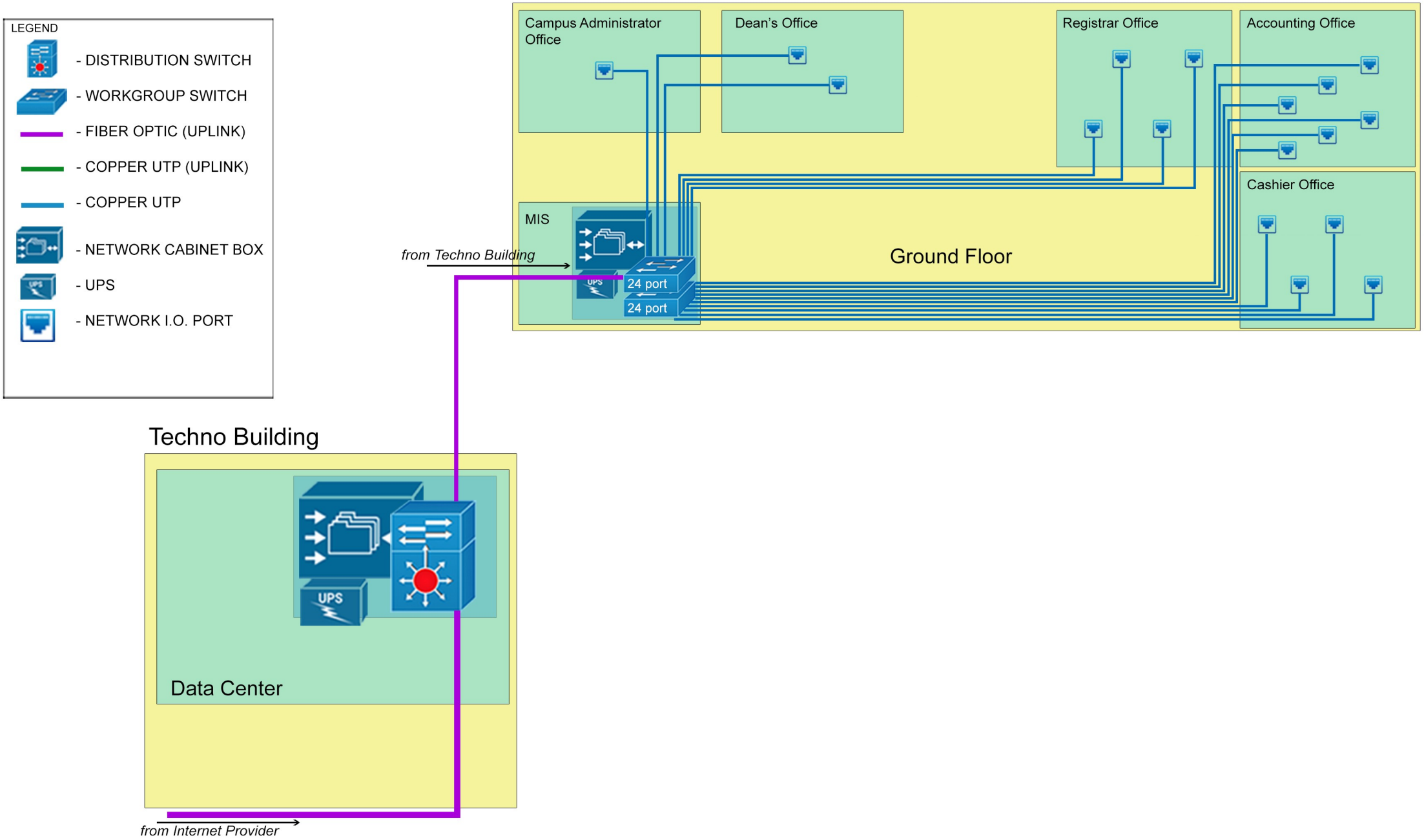# ROSARIO CAMPUS