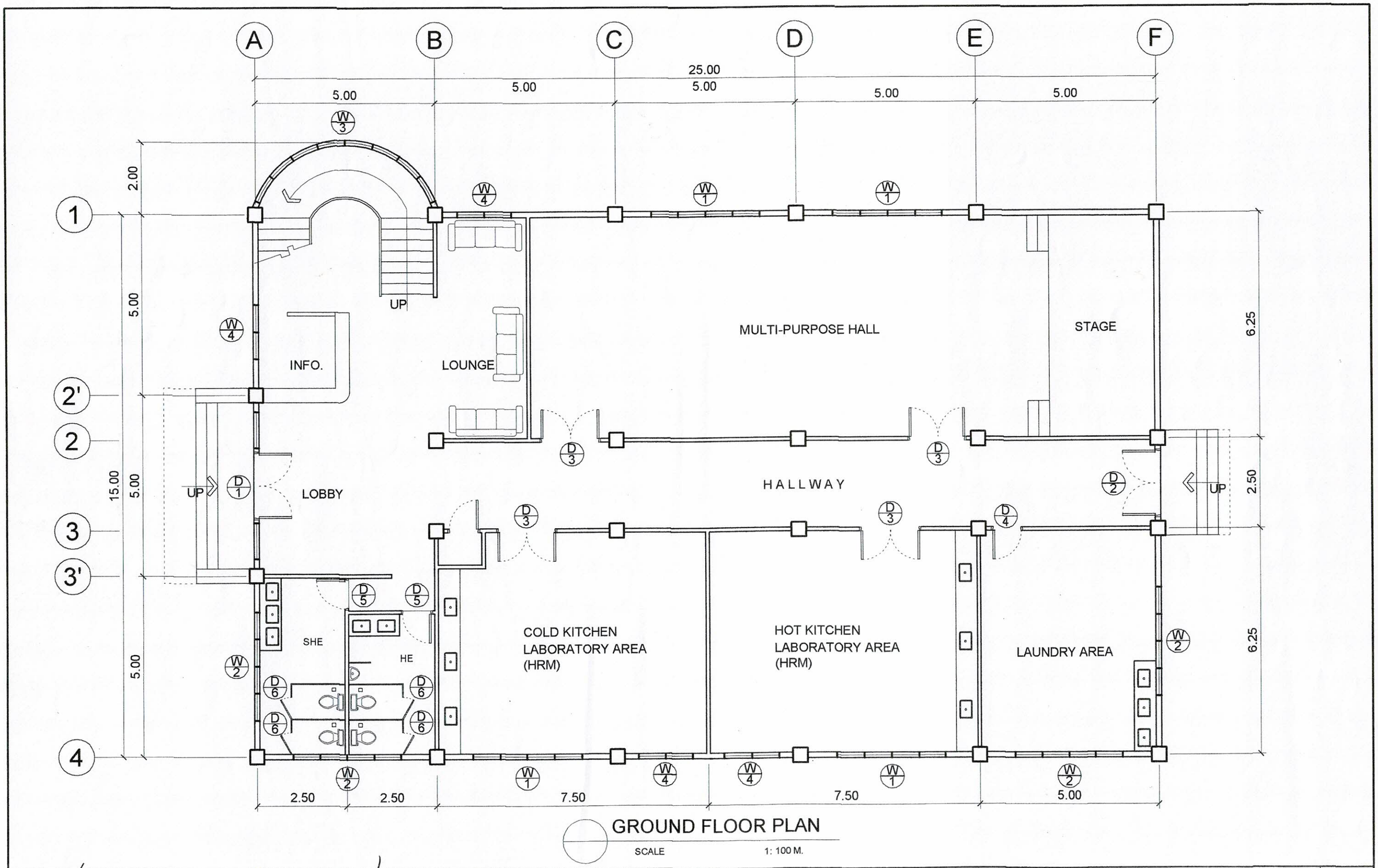

GROUND FLOOR PLAN

SCALE 1: 100 M.

PREPARED BY:	END USER:	ENDORSED BY:	REC APPROVAL:	APPROVED BY:	PROJECT TITLE / LOCATION:	IMPLEMENTING AGENCY:	SHT. NO.
E. N. RODEROS JR. PPU CEIT	D. L. ESPINELI DEAN SILANG CAMPUS	R. V. NUESTRO DEAN CEIT	H. D. ROBLES VPASS CVSU	D. C. CHAVEZ PRESIDENT CVSU	PROPOSED HRM HOSTEL CVSU SILANG CAMPUS	CAVITE STATE UNIVERSITY	A -1

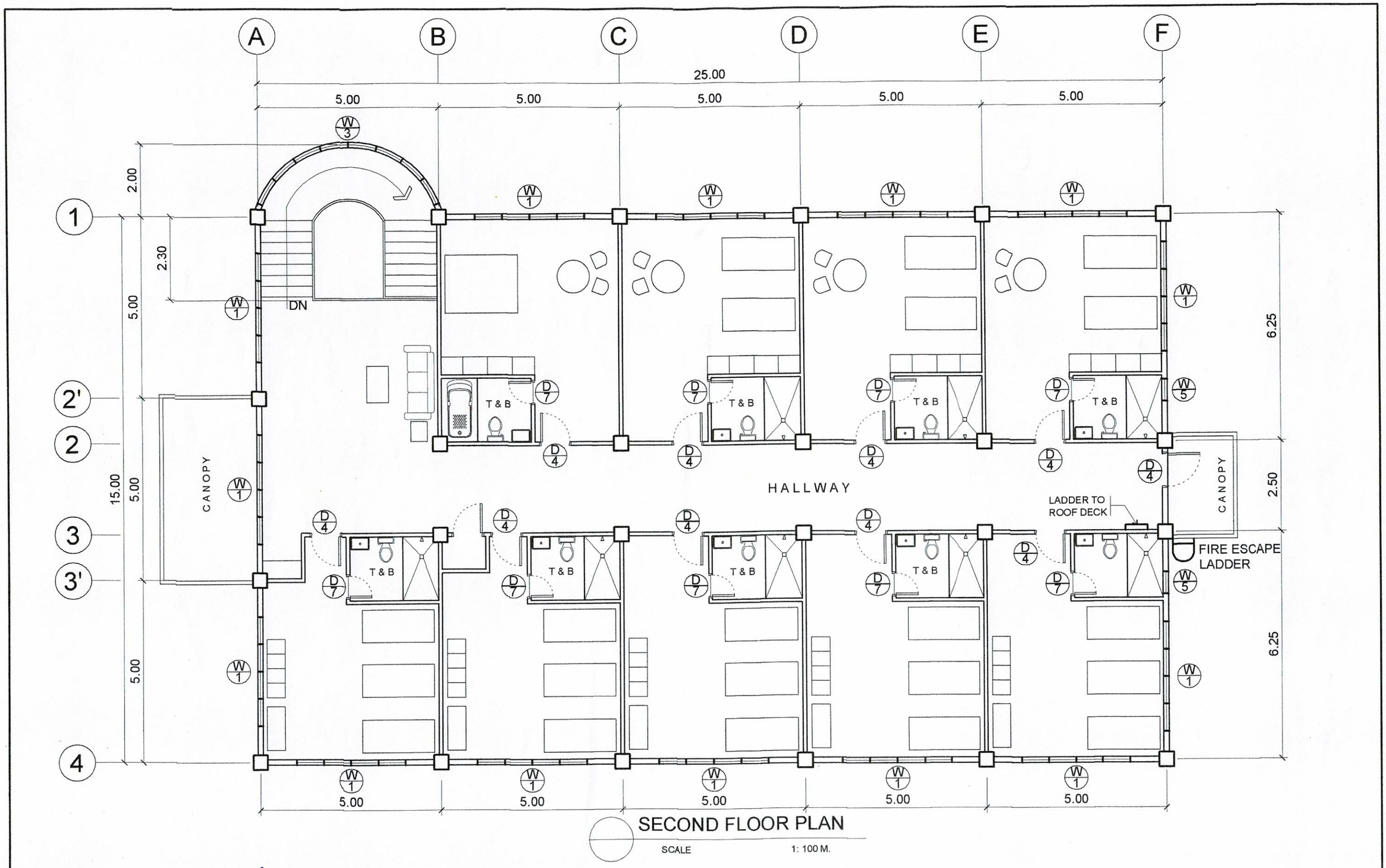

SECOND FLOOR PLAN

SCALE 1: 100 M.

PREPARED BY:	END USER:	ENDORSED BY:	REC APPROVAL:	APPROVED BY:	PROJECT TITLE / LOCATION:	IMPLEMENTING AGENCY:	SHT. NO.
E. N. RODEROS JR. PPU CEIT	D. L. ESPINELI DEAN SILANG CAMPUS	R. V. NUESTRO DEAN CEIT	H. D. ROBLES VPASS CVSU	D. C. CHAVEZ PRESIDENT CVSU	PROPOSED HRM HOSTEL CVSU SILANG CAMPUS	CAVITE STATE UNIVERSITY	A-2

FRONT ELEVATION

SCALE 1: 100 M.

PREPARED BY:	END USER:	ENDORSED BY:	REC APPROVAL:	APPROVED BY:	PROJECT TITLE / LOCATION:	IMPLEMENTING AGENCY:	SHT. NO.
E. N. RODEROS JR. PPU CEIT	D. L. ESPINELI DEAN SILANG CAMPUS	R. V. NUESTRO DEAN CEIT	H. D. ROBLES VPASS CVSU	D. C. CHAVEZ PRESIDENT CVSU	PROPOSED HRM HOSTEL CVSU SILANG CAMPUS	CAVITE STATE UNIVERSITY	A -3

REAR ELEVATION

SCALE 1: 100 M.

PREPARED BY:	END USER:	ENDORSED BY:	REC APPROVAL:	APPROVED BY:	PROJECT TITLE / LOCATION:	IMPLEMENTING AGENCY:	SHT. NO.
E. N. RODEROS JR. PPU CEIT	D. L. ESPINELI DEAN SILANG CAMPUS	R. V. NUESTRO DEAN CEIT	H. D. ROBLES VPASS CVSU	D. C. CHAVEZ PRESIDENT CVSU	PROPOSED HRM HOSTEL CVSU SILANG CAMPUS	CAVITE STATE UNIVERSITY	A - 4

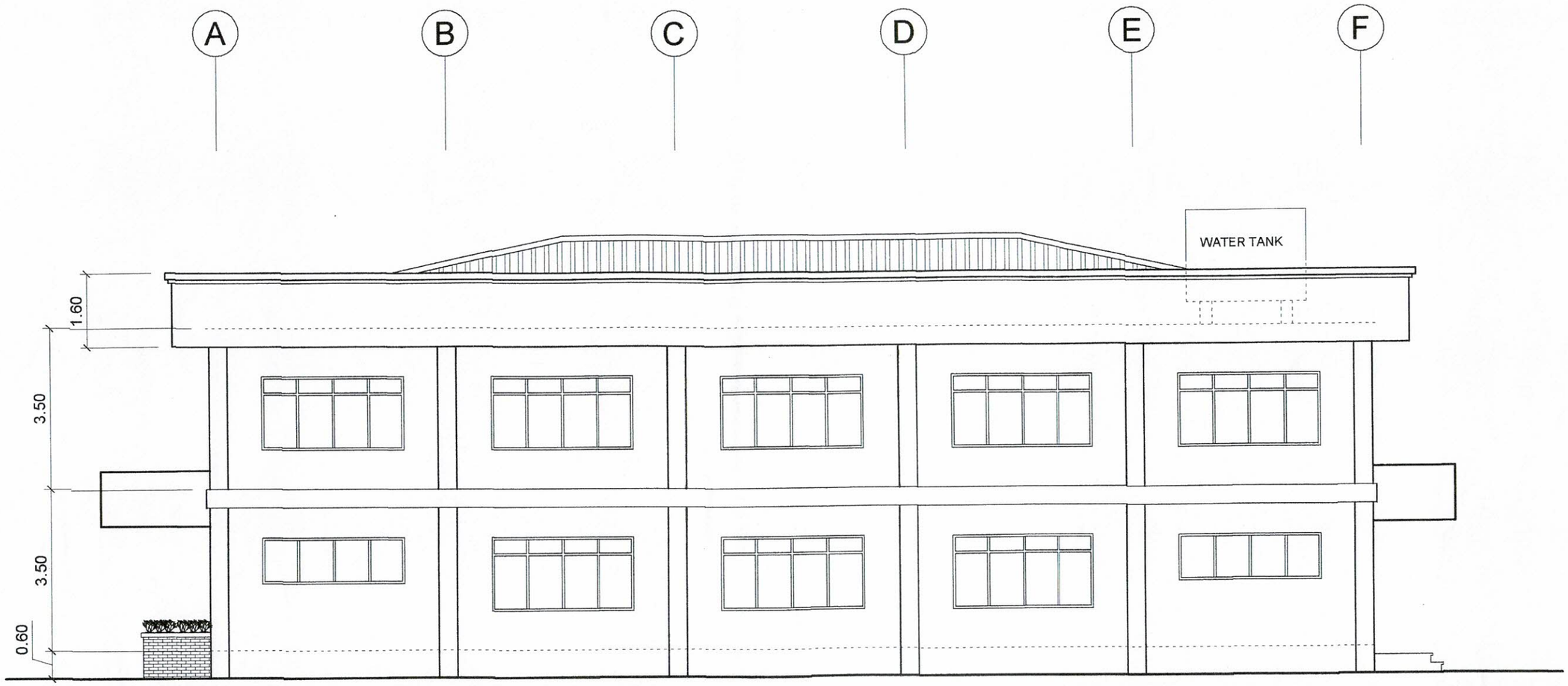

RIGHT SIDE ELEVATION

SCALE 1: 100 M.

PREPARED BY:	END USER:	ENDORSED BY:	REC APPROVAL:	APPROVED BY:	PROJECT TITLE / LOCATION:	IMPLEMENTING AGENCY:	SHT. NO.
E. N. RODEROS JR. PPU CEIT	D. L. ESPINELI DEAN SILANG CAMPUS	R. V. NUESTRO DEAN CEIT	H. D. ROBLES VPASS CVSU	D. C. CHAVEZ PRESIDENT CVSU	PROPOSED HRM HOSTEL CVSU SILANG CAMPUS	CAVITE STATE UNIVERSITY	A - 5

F E D C B A

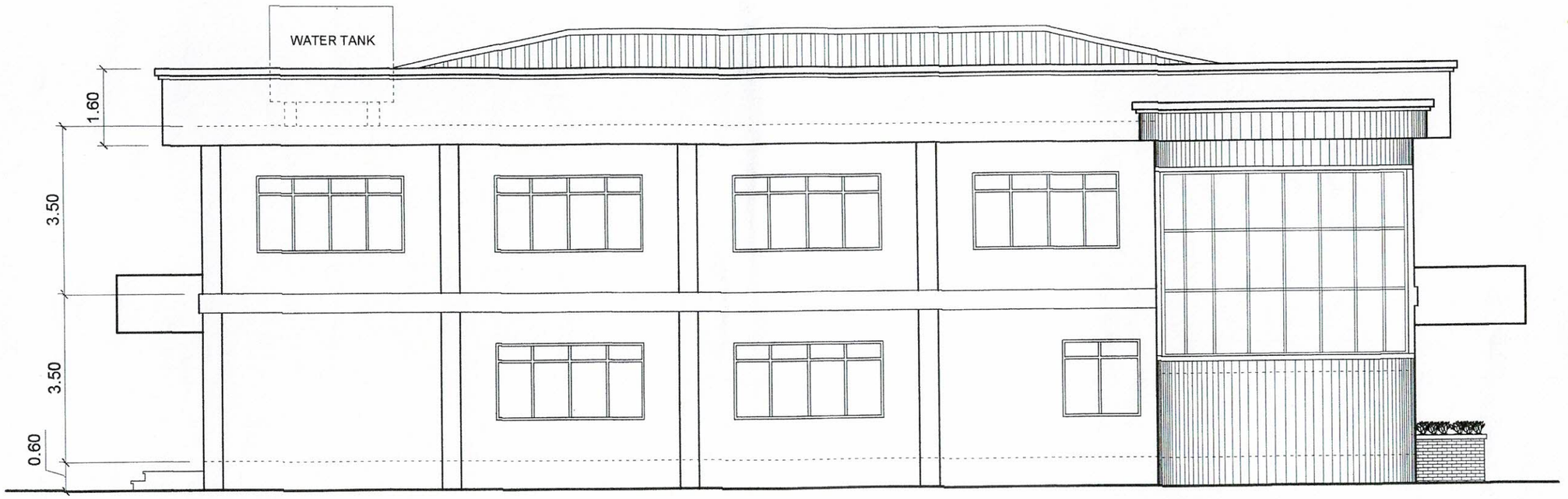

LEFT SIDE ELEVATION

SCALE 1: 100 M.

PREPARED BY:	END USER:	ENDORSED BY:	REC APPROVAL:	APPROVED BY:	PROJECT TITLE / LOCATION:	IMPLEMENTING AGENCY:	SHT. NO.
E. N. RODEROS JR. PPU CEIT	D. L. ESPINELI DEAN SILANG CAMPUS	R. V. NUESTRO DEAN CEIT	H. D. ROBLES VPASS CVSU	D. C. CHAVEZ PRESIDENT CVSU	PROPOSED HRM HOSTEL CVSU SILANG CAMPUS	CAVITE STATE UNIVERSITY	A - 6

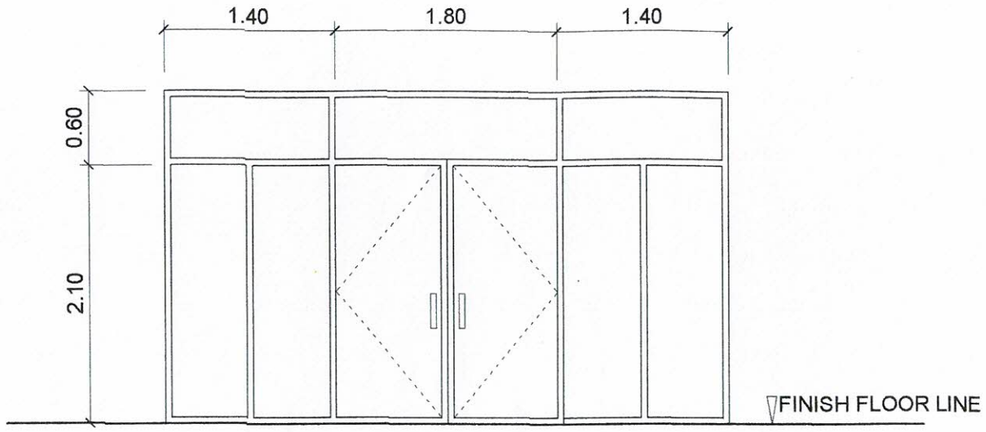

D/1

ALUMINUM FRAME DOOR COMPLETE W / ALL ACCESSORIES W / 3/16" THK COLORED GLASS ON COLORED POWDER COATED FINISH ALUMINUM FRAMING
1 SET

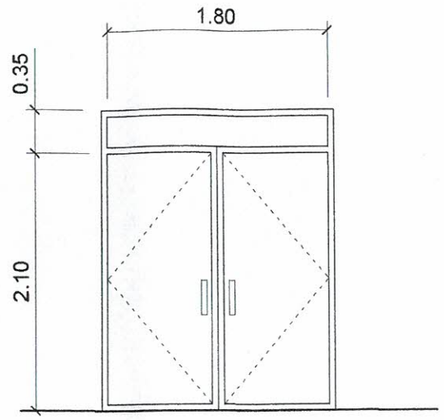

D/2

ALUMINUM FRAME DOOR COMPLETE W / ALL ACCESSORIES W / 3/16" THK COLORED GLASS ON COLORED POWDER COATED FINISH ALUMINUM FRAMING
1 SET

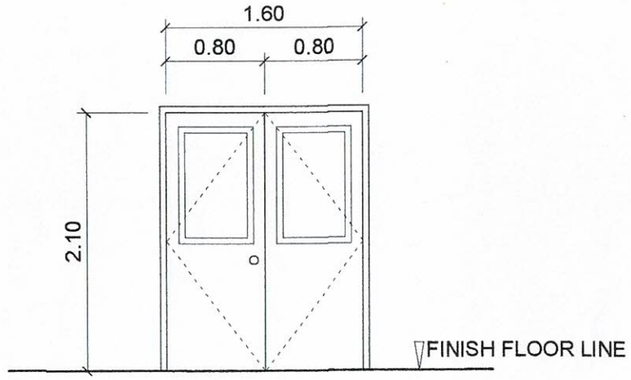

D/3

1.60 X 2.10 FLUSH DOOR W/ 1/4" THK. CLEAR GLASS VIEW WINDOW, W/ COMPLETE ACCESSORIES
4 SETS

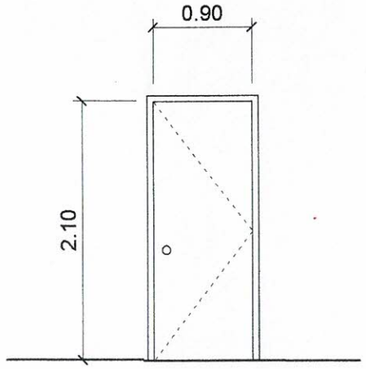

D/4

0.90 X 2.10 FLUSH DOOR W/ COMPLETE ACCESSORIES
11 SETS

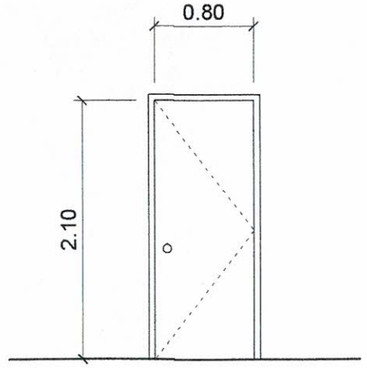

D/5

0.80 X 2.10 FLUSH DOOR W/ COMPLETE ACCESSORIES
2 SETS

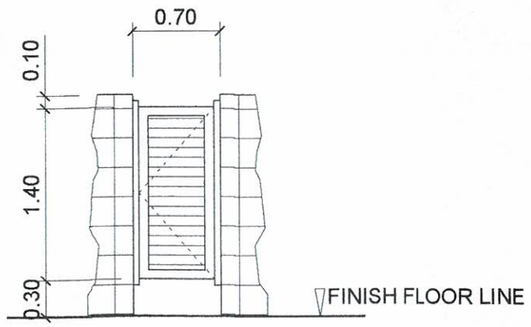

D/6

0.60 X 1.40 PVC DOOR W/ COMPLETE ACCESSORIES
4 SETS

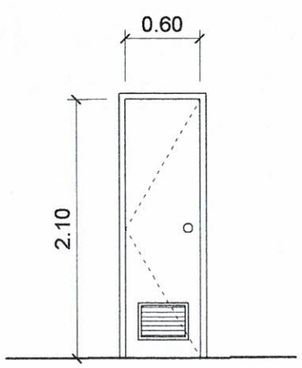

D/7

0.60 X 2.10 PVC DOOR W/ COMPLETE ACCESSORIES
9 SETS

SCHEDULE OF DOORS

SCALE 1: 50 M.

PREPARED BY:	END USER:	ENDORSED BY:	REC APPROVAL:	APPROVED BY:	PROJECT TITLE / LOCATION:	IMPLEMENTING AGENCY:	SHT. NO.
E. N. RODEROS JR. PPU CEIT	D. L. ESPINELI DEAN SILANG CAMPUS	R. V. NUESTRO DEAN CEIT	H. D. ROBLES VPASS CVSU	D. C. CHAVEZ PRESIDENT CVSU	PROPOSED HRM HOSTEL CVSU SILANG CAMPUS	CAVITE STATE UNIVERSITY	A - 7

SCHEDULE OF WINDOWS

SCALE 1: 50 M.

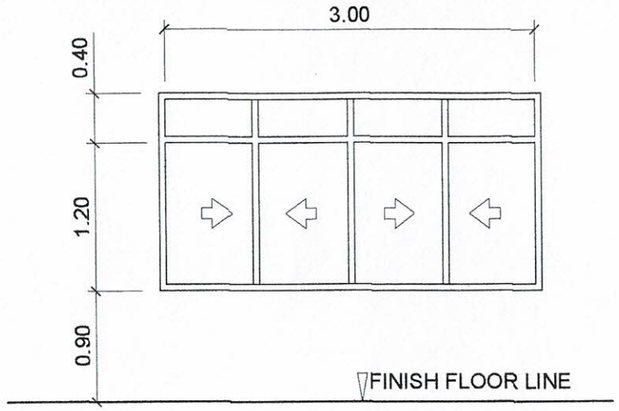

W / 1

ALUMINUM SLIDING WINDOW COMPLETE W / ALL ACCESSORIES W / 3/8" THK COLORED GLASS ON COLORED POWDER COATED FINISH ALUMINUM FRAMING
19 SETS

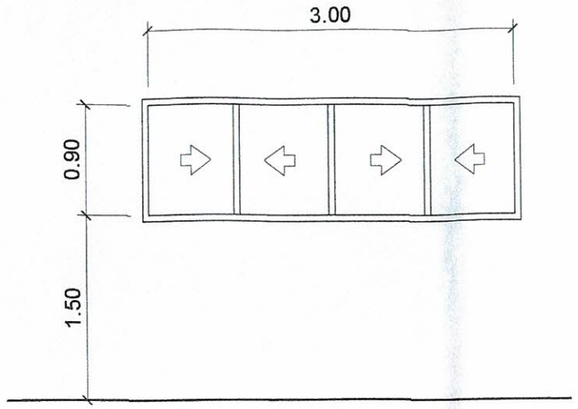

W / 2

ALUMINUM SLIDING WINDOW COMPLETE W / ALL ACCESSORIES W / 3/8" THK COLORED GLASS ON COLORED POWDER COATED FINISH ALUMINUM FRAMING
4 SETS

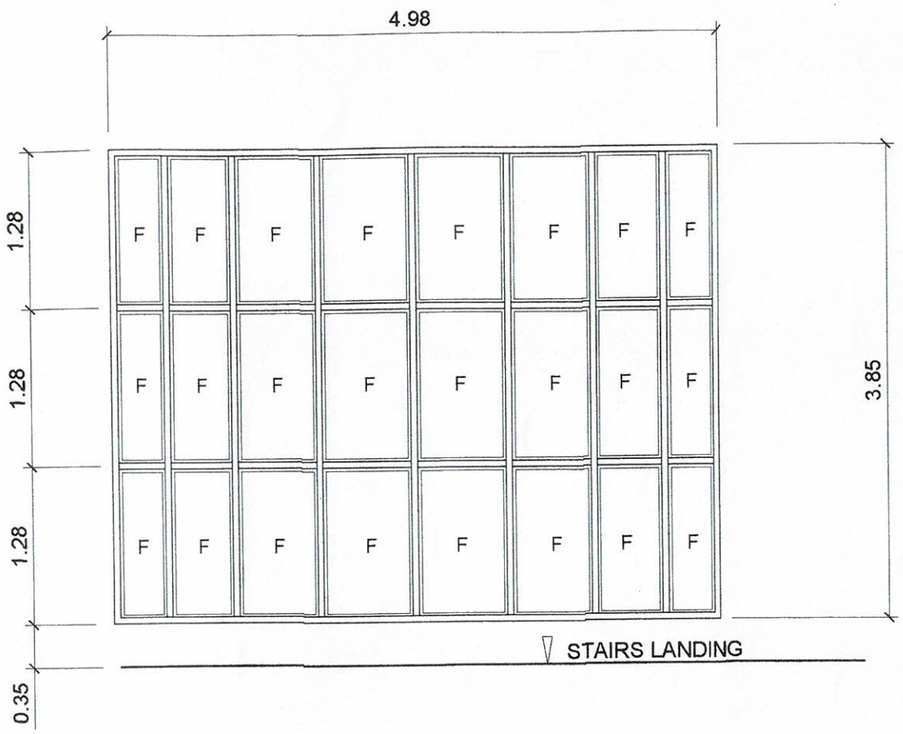

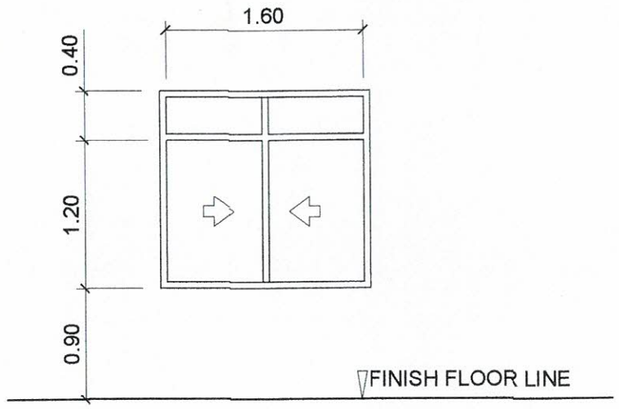

W / 4

ALUMINUM SLIDING WINDOW COMPLETE W / ALL ACCESSORIES W / 3/8" THK COLORED GLASS ON COLORED POWDER COATED FINISH ALUMINUM FRAMING
5 SETS

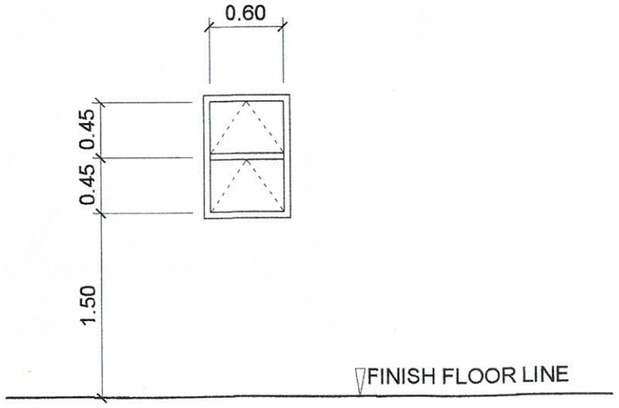

W / 5

ALUMINUM AWNING WINDOW COMPLETE W / ALL ACCESSORIES W / 3/8" THK COLORED GLASS ON COLORED POWDER COATED FINISH ALUMINUM FRAMING
2 SETS

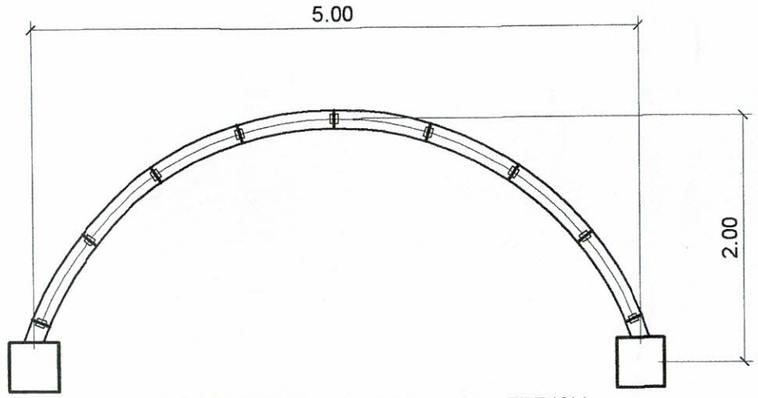

W / 3

ALUMINUM FIXED WINDOW COMPLETE W / ALL ACCESSORIES W / 3/8" THK COLORED GLASS ON COLORED POWDER COATED FINISH ALUMINUM FRAMING
1 SET

PREPARED BY:	END USER:	ENDORSED BY:	REC APPROVAL:	APPROVED BY:	PROJECT TITLE / LOCATION:	IMPLEMENTING AGENCY:	SHT. NO.
E. N. RODEROS JR. PPU CEIT	D. L. ESPINELI DEAN SILANG CAMPUS	R. V. NUESTRO DEAN CEIT	H. D. ROBLES VPASS CVSU	D. C. CHAVEZ PRESIDENT CVSU	PROPOSED HRM HOSTEL CVSU SILANG CAMPUS	CAVITE STATE UNIVERSITY	A - 8

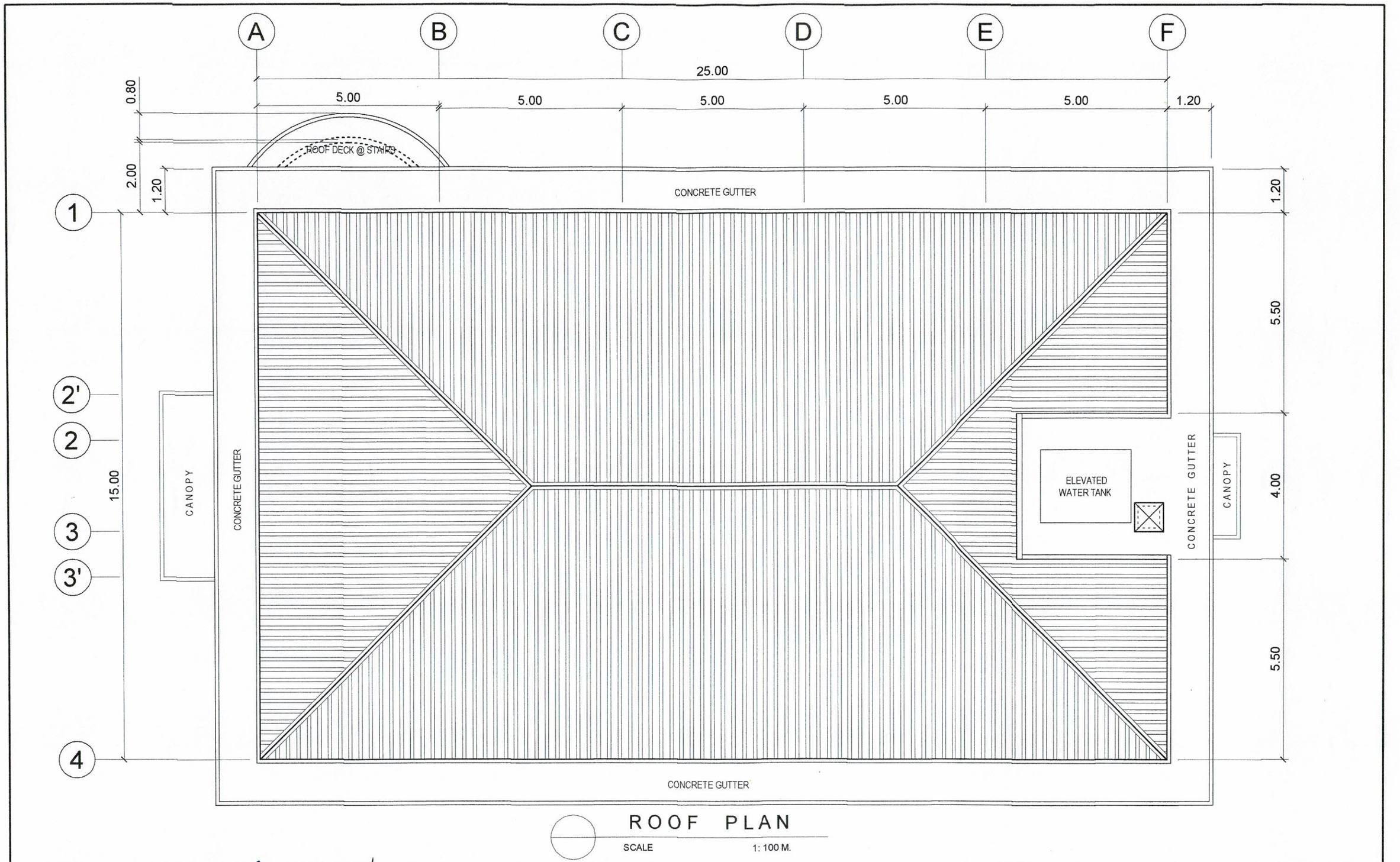

ROOF PLAN

SCALE 1: 100 M.

PREPARED BY:	END USER:	ENDORSED BY:	REC APPROVAL:	APPROVED BY:	PROJECT TITLE / LOCATION:	IMPLEMENTING AGENCY:	SHT. NO.
E. N. RODEROS JR. PPU CEIT	D. L. ESPINELI DEAN SILANG CAMPUS	R. V. NUESTRO DEAN CEIT	H. D. ROBLES VPASS CVSU	D. C. CHAVEZ PRESIDENT CVSU	PROPOSED HRM HOSTEL CVSU SILANG CAMPUS	CAVITE STATE UNIVERSITY	A - 9

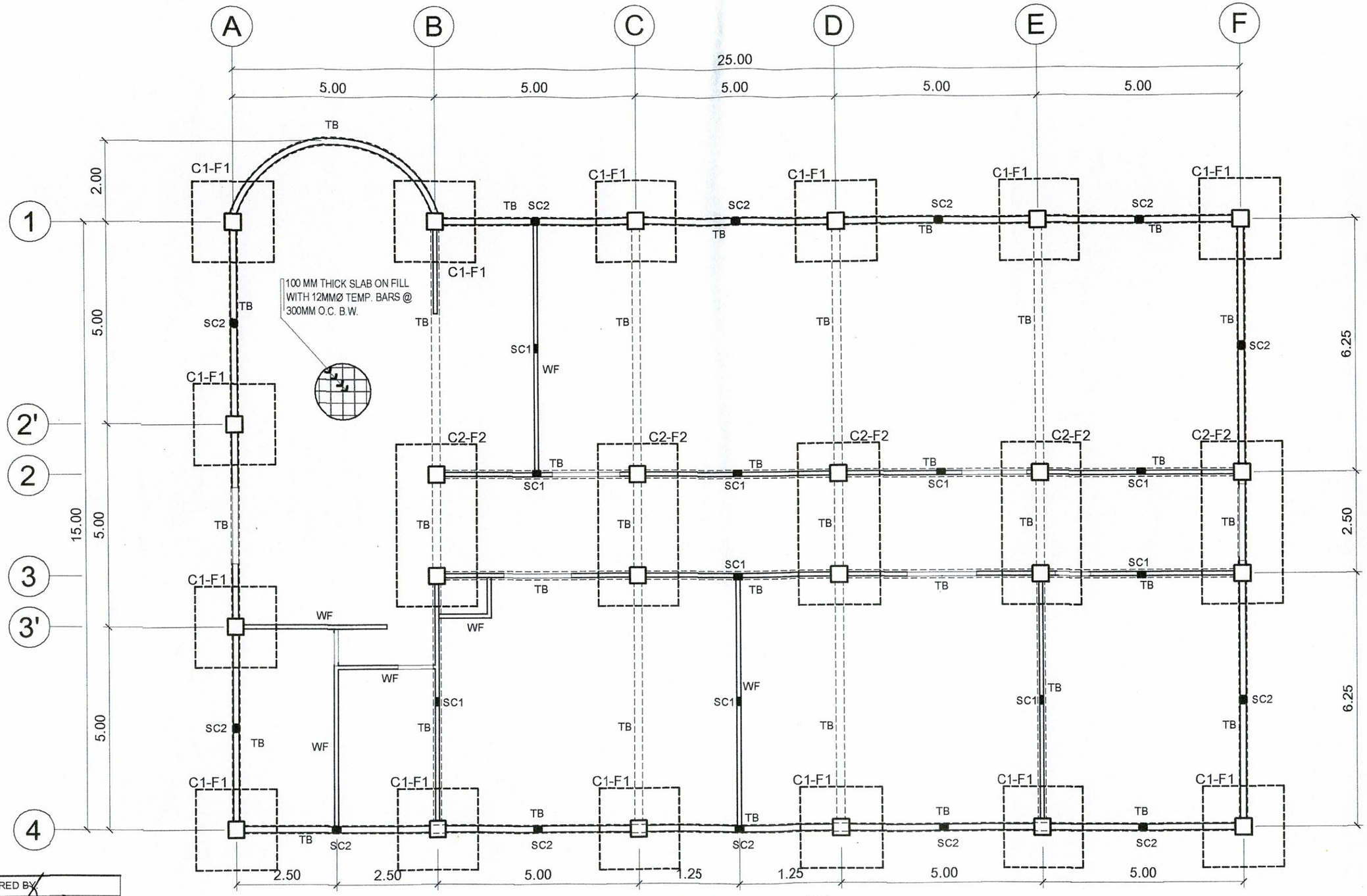

FOUNDATION PLAN

SCALE 1: 100 M.

PREPARED BY:	STRUCTL. ENGR:	END USER:	ENDORSED BY:	REC APPROVAL:	APPROVED BY:	PROJECT TITLE / LOCATION:	IMPLEMENTING AGENCY:	SHT. NO.
E. N. RODEROS JR. DCE CEIT	M. BAGASDAS JR. DCE CEIT	D. L. ESPINELI DEAN SILANG CAMPUS	R. V. NUESTRO DEAN CEIT	H. D. ROBLES VPASS CVSU	D. C. CHAVEZ PRESIDENT CVSU	PROPOSED HRM HOSTEL CVSU SILANG CAMPUS	CAVITE STATE UNIVERSITY	S - 1

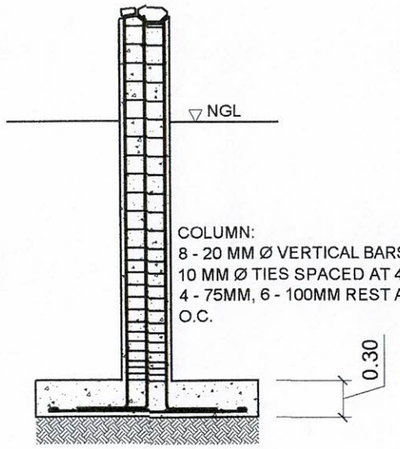

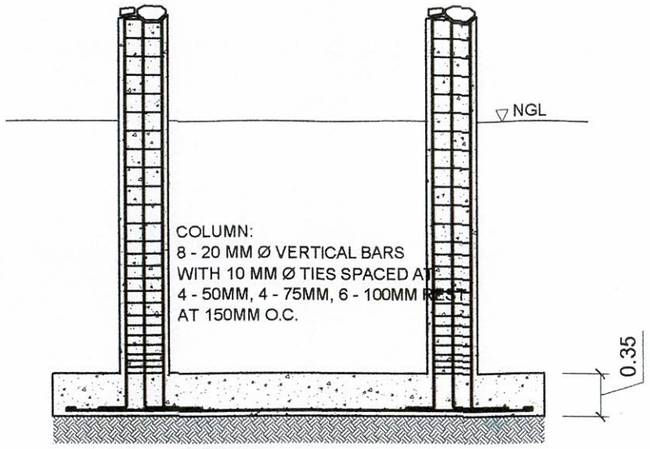

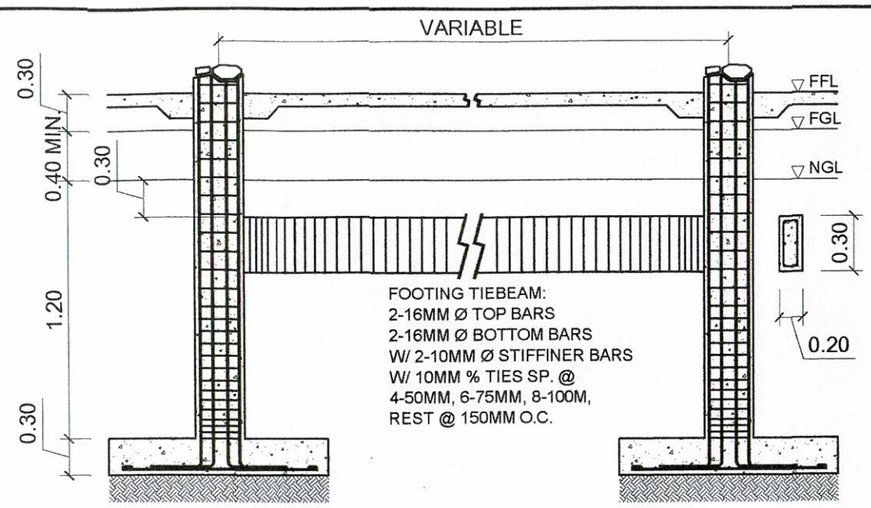

DETAIL OF TIE BEAM

SCALE 1: 50 M.

C1 - F1

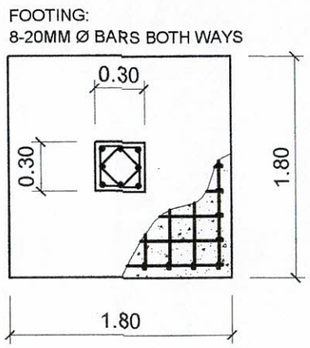

C2 - F2

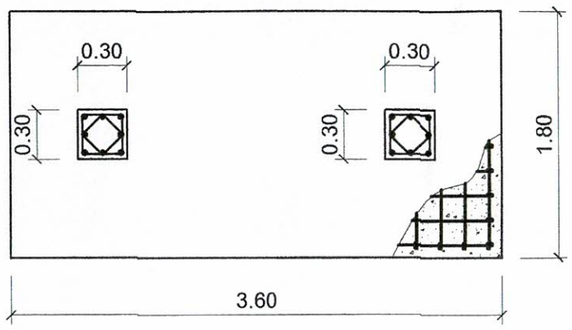

COLUMN-FOOTING DETAIL

SCALE 1: 50 M.

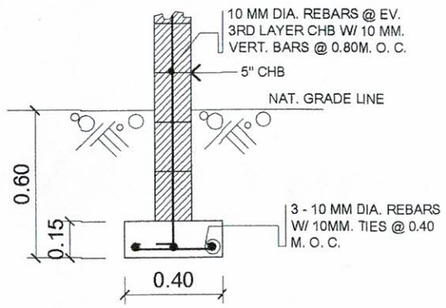

SECTION OF WF 1

SCHEDULE OF COLUMNS & STIFFENER COLS.

BEAM	DIMENSION	VERTICAL BARS	BAR ARRANGEMENT	LATERAL TIES	REMARKS
C-1	300 x 300	8 - 20 MM Ø		4-50 MM, 4-75 MM, 6-100 MM REST @ 150 MM O.C.	8 - 16 MM, FRM. 2ND FLOOR TO ROOF BEAM
C-2	300 x 300	8 - 20 MM Ø		4-50 MM, 4-75 MM, 6-100 MM REST @ 150 MM O.C.	8 - 16 MM, FRM. 2ND FLOOR TO ROOF BEAM
SC 1	100 x 200	4 - 12 MM Ø		4-50 MM, 4-75 MM, 6-100 MM REST @ 150 MM O.C.	
SC 2	150 x 200	4 - 12 MM Ø		4-50 MM, 4-75 MM, 6-100 MM REST @ 150 MM O.C.	

PREPARED BY:
E. N. RODEROS JR.
DCE CEIT

STRUCTL. ENGR:	END USER:	ENDORSED BY:	REC APPROVAL:	APPROVED BY:	PROJECT TITLE / LOCATION:	IMPLEMENTING AGENCY:	SHT. NO.
M. PAGASDAS JR. DCE CEIT	D. L. ESPINELI DEAN SILANG CAMPUS	R. V. NUESTRO DEAN CEIT	H.D. ROBLES VPASS CVSU	D. C. CHAVEZ PRESIDENT CVSU	PROPOSED HRM HOSTEL CVSU SILANG CAMPUS	CAVITE STATE UNIVERSITY	S - 2

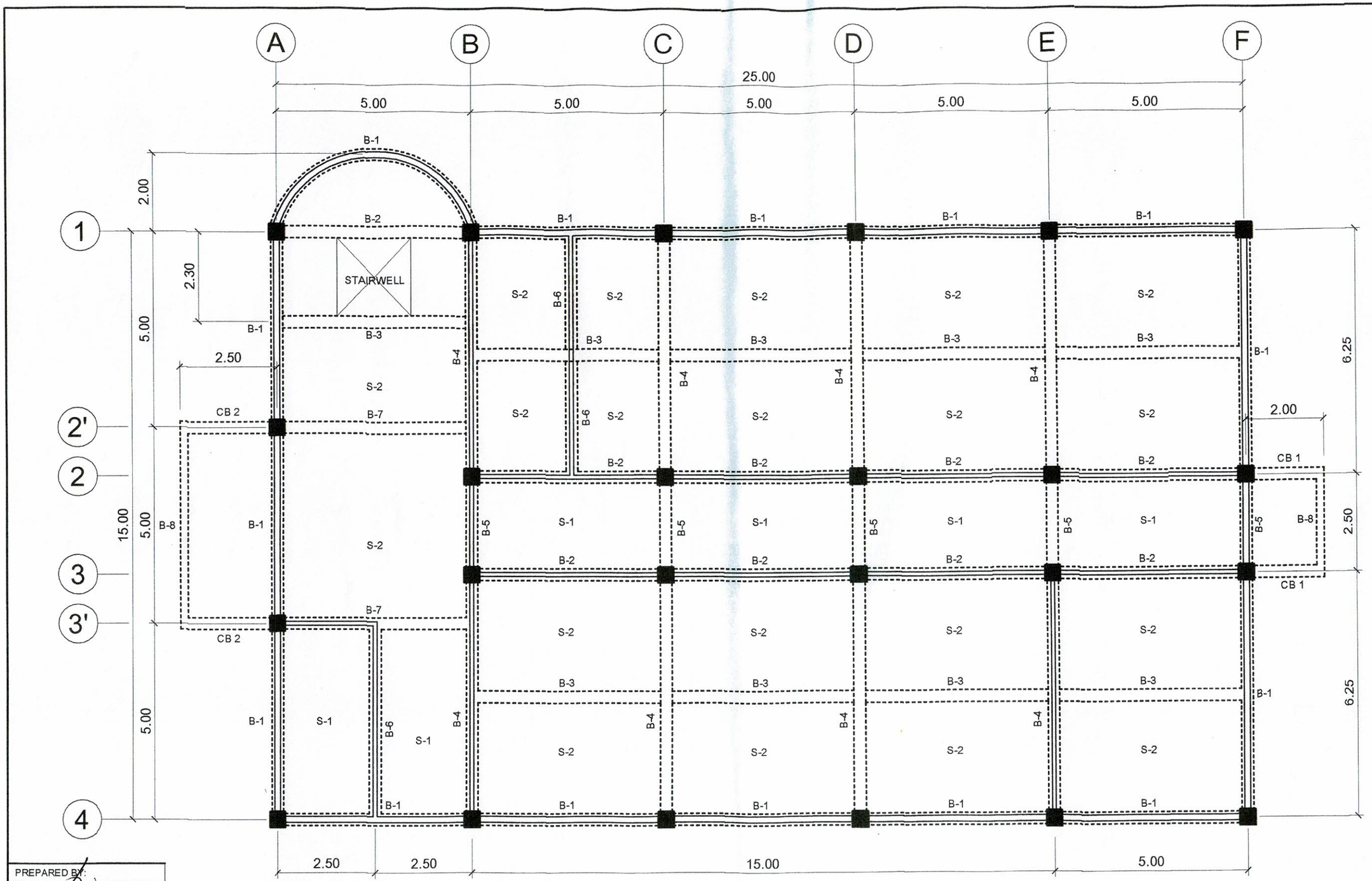

PREPARED BY:

E. N. RODEROS JR.
DCE CEIT

2ND FLOOR BEAM STRUCTURAL PLAN

SCALE 1: 100 M.

STRUCTL. ENGR:	END USER:	ENDORSED BY:	REC APPROVAL:	APPROVED BY:	PROJECT TITLE / LOCATION:	IMPLEMENTING AGENCY:	SHT. NO.
M. BAGASDAS JR. DCE CEIT	D. L. ESPINELI DEAN SILANG CAMPUS	R. V. NUESTRO DEAN CEIT	H. D. ROBLES VPASS CVSU	D. C. CHAVEZ PRESIDENT CVSU	PROPOSED HRM HOSTEL CVSU SILANG CAMPUS	CAVITE STATE UNIVERSITY	S - 3

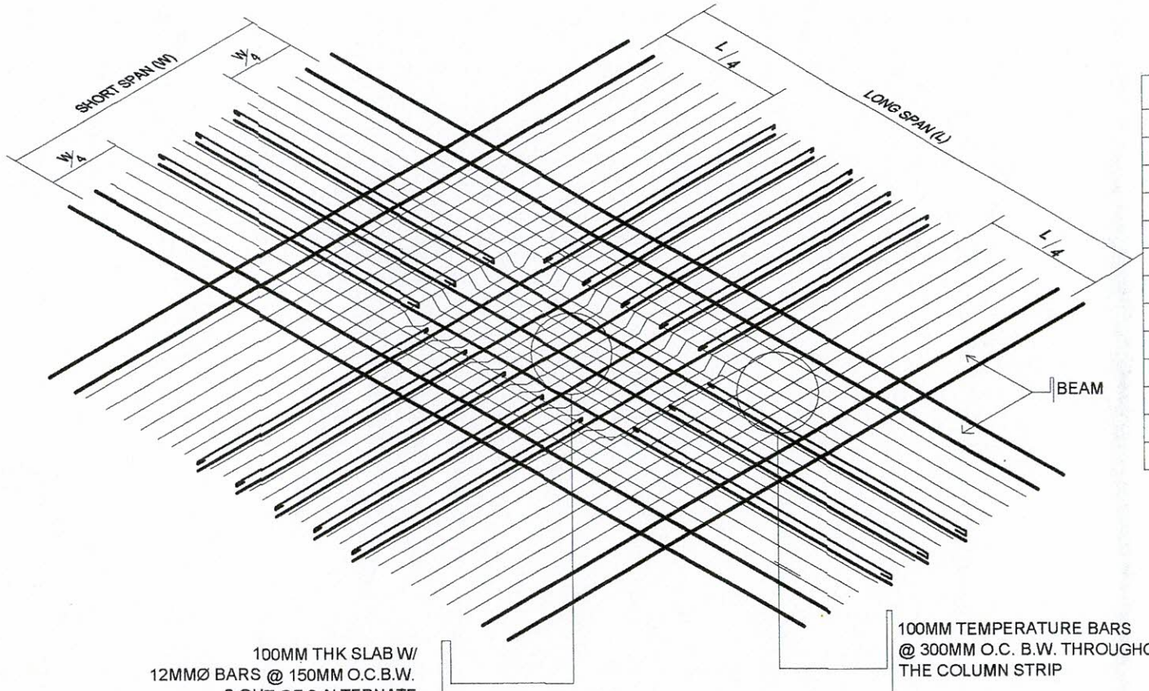

DETAIL OF TWO-WAY SLAB (S-2)

DETAIL OF SLAB REINFORCEMENT

SCALE NTS

SCHEDULE OF BEAMS

BEAM	DIMENSION	SUPPORT		MIDSPAN		LATERAL TIES	REMARKS
		TOP	BOTTOM	TOP	BOTTOM		
B - 1	300 x 450	5 -16 MM Ø	3 -16 MM Ø	3 -16 MM Ø	5 -16 MM Ø	2-10 MM Ø	
B - 2	300 x 450	5 -16 MM Ø	3 -16 MM Ø	3 -16 MM Ø	5 -16 MM Ø	2-10 MM Ø	
B - 3	300 x 450	3-25 MM Ø	5-25 MM Ø	3-25 MM Ø	5-25 MM Ø	2-10 MM Ø	
B - 4	300 x 450	5-25 MM Ø	3-25 MM Ø	3-25 MM Ø	5-25 MM Ø	2-10 MM Ø	
B - 5	250 x 400	3-25 MM Ø	2-25 MM Ø	2-25 MM Ø	3-25 MM Ø	2-10 MM Ø	
B - 6	300 x 450	3 -16 MM Ø	5 -16 MM Ø	3 -16 MM Ø	5 -16 MM Ø	2-10 MM Ø	
B - 7	250 x 400	3 -16 MM Ø	5 -16 MM Ø	3 -16 MM Ø	5 -16 MM Ø	2-10 MM Ø	
TB	200 x 300	2-16 MM Ø	2-16 MM Ø	2-16 MM Ø	2-16 MM Ø	2-10 MM Ø	
CB 1	300 x 450	5 -16 MM Ø	3 -16 MM Ø	5 -16 MM Ø	3 -16 MM Ø	2-10 MM Ø	
CB 2	300 x 450	5 - 20 MM Ø	3 -20 MM Ø	5 - 20 MM Ø	3 -20 MM Ø	2-10 MM Ø	
B - 8	200 x 450	3 -16 MM Ø	2 -16 MM Ø	2 -16 MM Ø	3 -16 MM Ø	2-10 MM Ø	

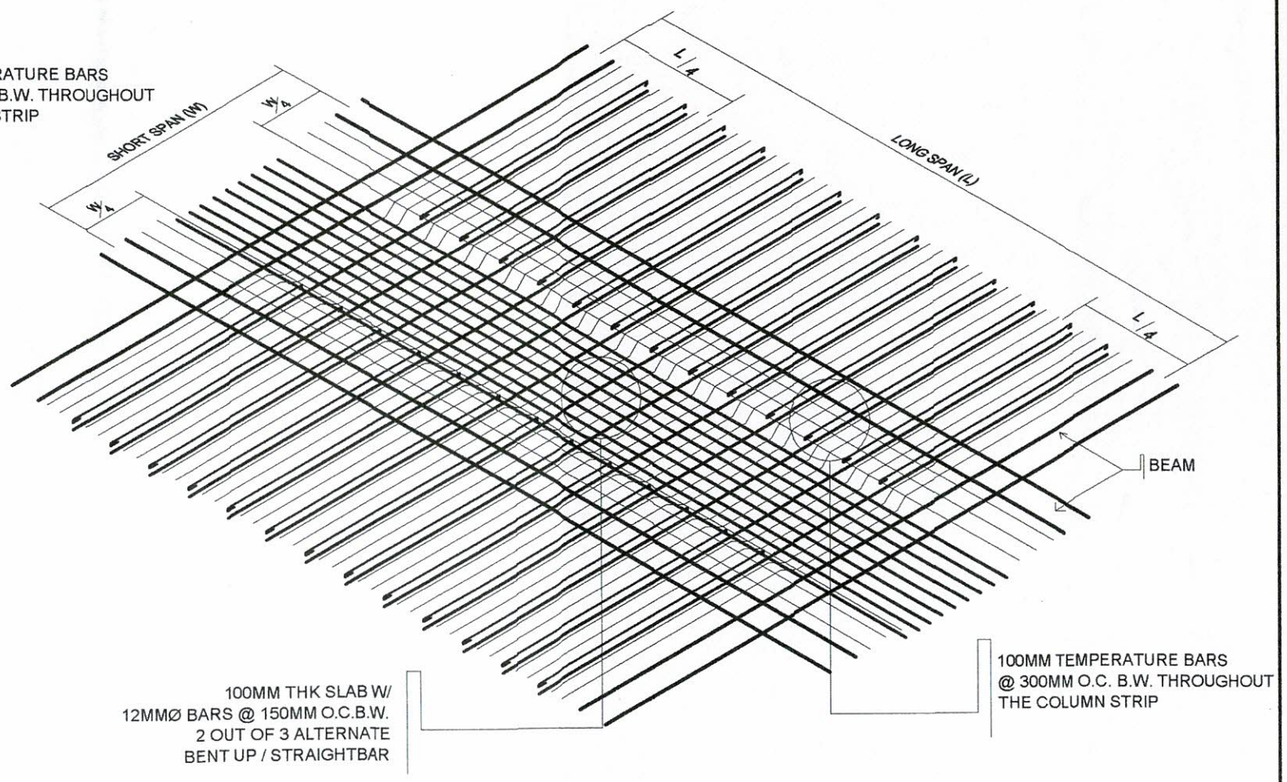

DETAIL OF ONE-WAY SLAB (S-1)

PREPARED BY:							
E. N. RODEROS JR. DCE CEIT							
STRUCTL. ENGR:	END USER:	ENDORSED BY:	REC APPROVAL:	APPROVED BY:	PROJECT TITLE / LOCATION:	IMPLEMENTING AGENCY:	SHT. NO.
M. DASAGDAS JR. DCE CEIT	D. L. ESPINELI DEAN SILANG CAMPUS	R. V. NUESTRO DEAN CEIT	H. D. ROBLES VPASS CVSU	D. C. CHAVEZ PRESIDENT CVSU	PROPOSED HRM HOSTEL CVSU SILANG CAMPUS	CAVITE STATE UNIVERSITY	S - 4

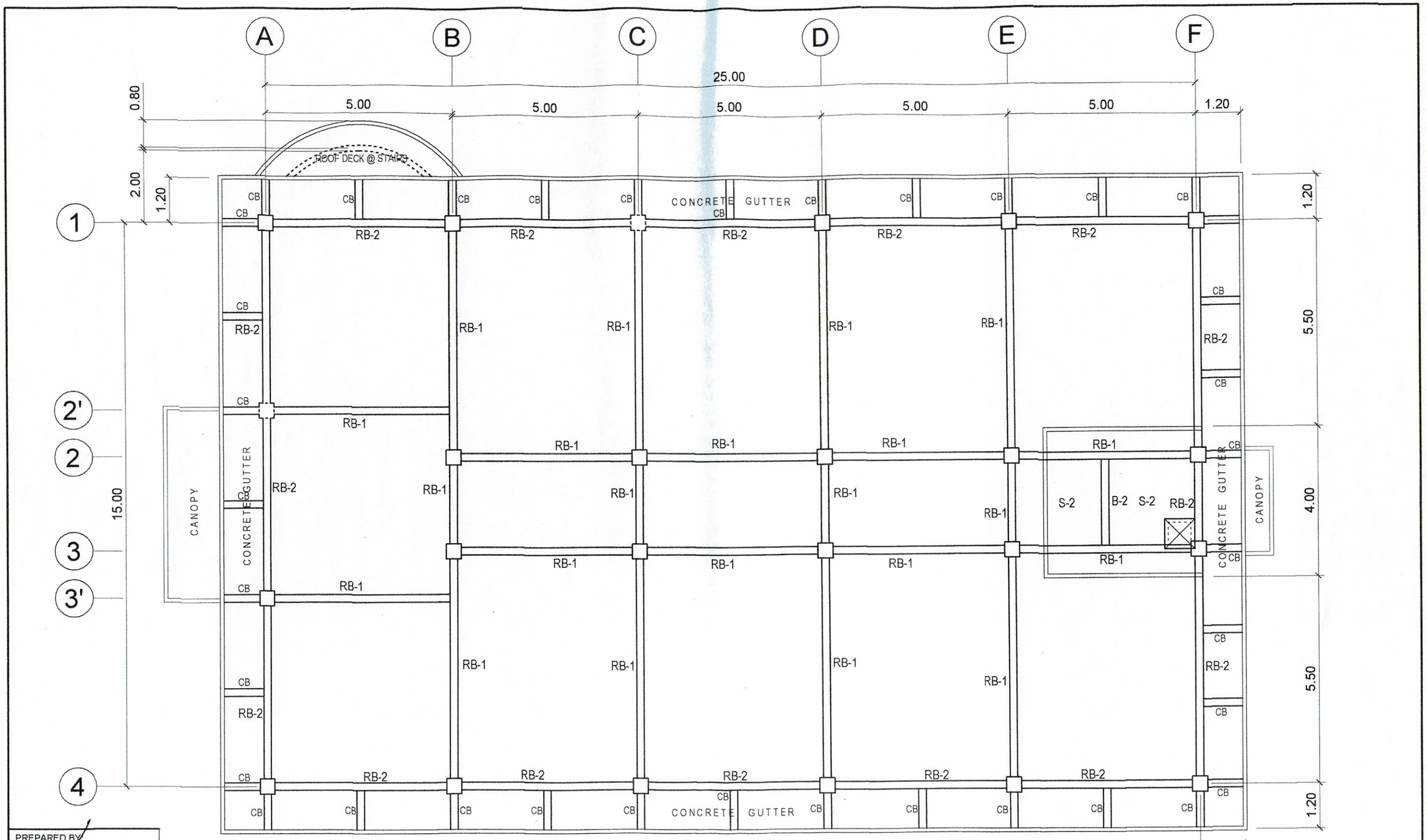

ROOF BEAM PLAN

SCALE 1: 100 M.

PREPARED BY:						
E. N. RODEROS JR. PPU CEIT						
STRUCTL. ENGR:	END USER:	ENDORSED BY:	REC APPROVAL:	APPROVED BY:	PROJECT TITLE / LOCATION:	IMPLEMENTING AGENCY:	SHT. NO.
M. DAGASDAS JR. DCE CEIT	D. L. ESPINELI DEAN SILANG CAMPUS	R. V. NUESTRO DEAN CEIT	H. D. ROBLES VPASS CVSU	D. C. CHAVEZ PRESIDENT CVSU	PROPOSED HRM HOSTEL CVSU SILANG CAMPUS	CAVITE STATE UNIVERSITY	S - 5

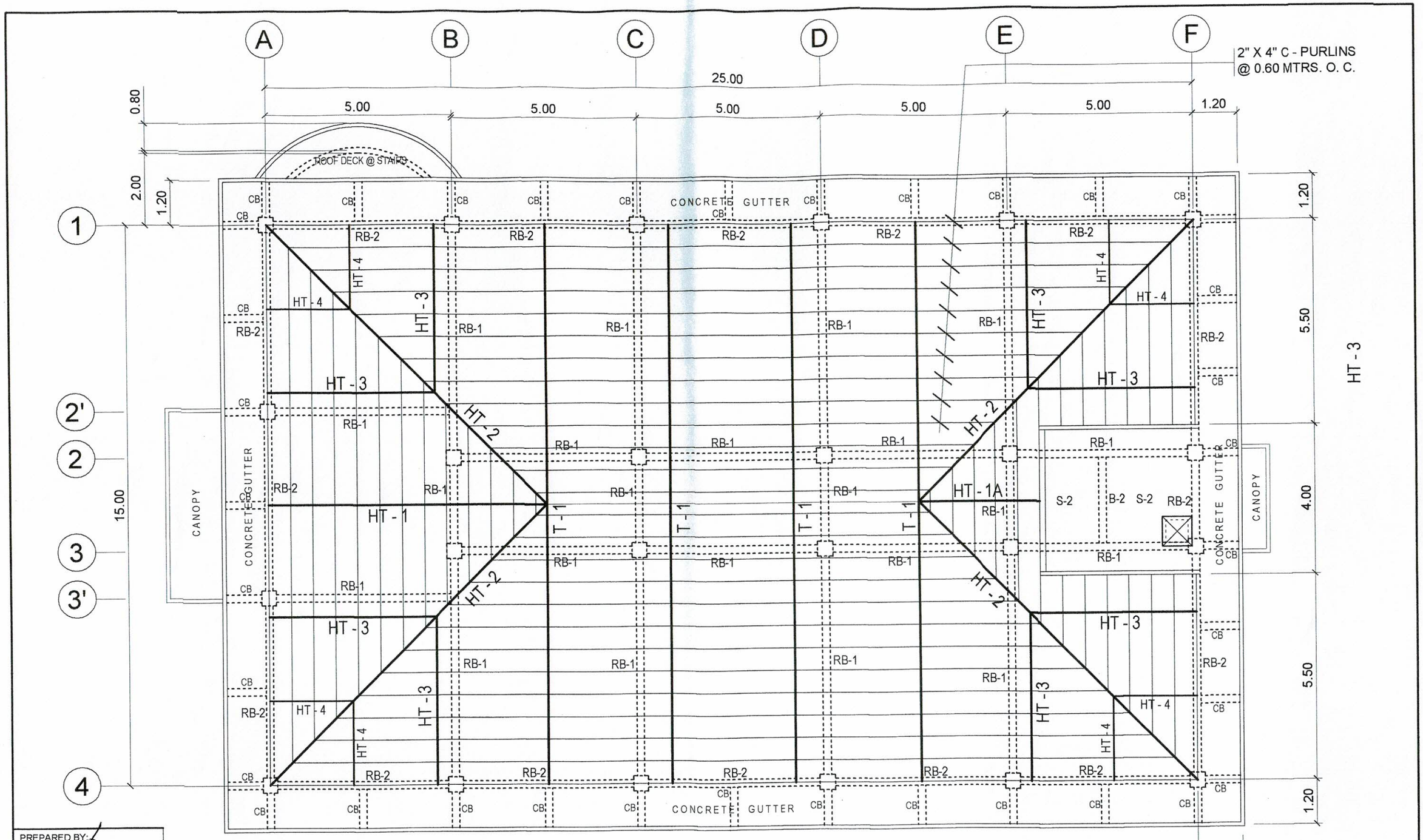

ROOF FRAMING PLAN

SCALE 1: 100 M.

PREPARED BY:							
E. N. RODEROS JR. PPU CEIT							
STRUCTL. ENGR:	END USER:	ENDORSED BY:	REC APPROVAL:	APPROVED BY:	PROJECT TITLE / LOCATION:	IMPLEMENTING AGENCY:	SHT. NO.
M. DAGASDAS JR. DCE CEIT	D. L. ESPINELI DEAN SILANG CAMPUS	R. V. NUESTRO DEAN CEIT	H. D. ROBLES VPASS CVSU	D. C. CHAVEZ PRESIDENT CVSU	PROPOSED HRM HOSTEL CVSU SILANG CAMPUS	CAVITE STATE UNIVERSITY	S - 6

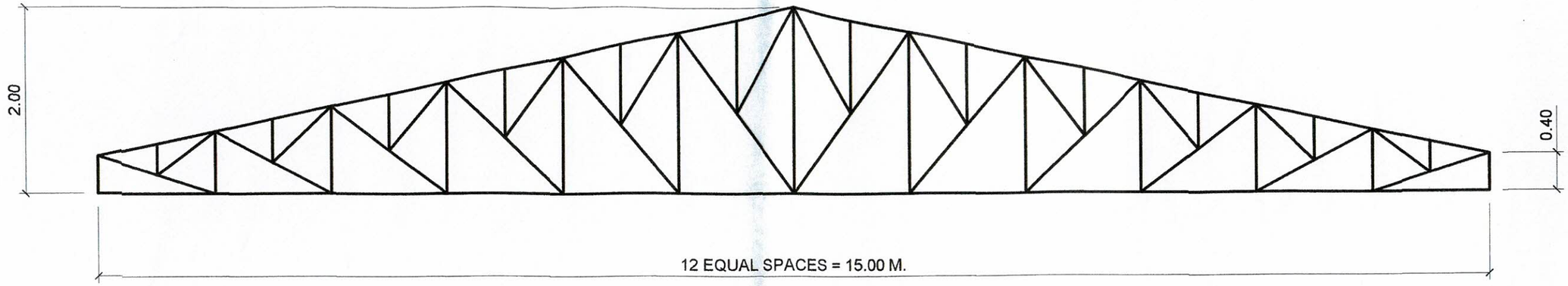

TRUSS DIAGRAM (T - 1)

SCALE 1: 50 M.

NOTE : FOR T-1, HT-1, HT-1A & HT-2,

1. USE 2 - 2 ½" X 2½" X ¼" ANGLE BARS FOR TOP CHORD and BOTTOM CHORD
2. USE 2 - 2" X 2" X ¼" ANGLE BARS FOR WEB MEMBERS
3. USE 2"X 4" CEE PURLINS SP.@0.60 O.C.
4. USE ⅜" THK. GUSSET PLATE
5. ALL JOINTS SHALL BE FULLY WELDED

RB 1

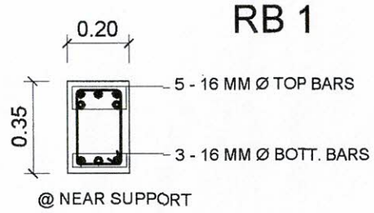

@ NEAR SUPPORT

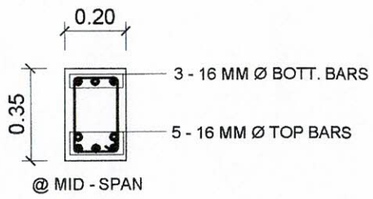

@ MID - SPAN

RB 2

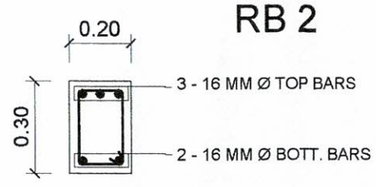

@ NEAR SUPPORT

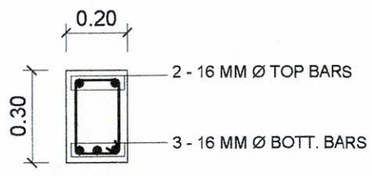

@ MID - SPAN

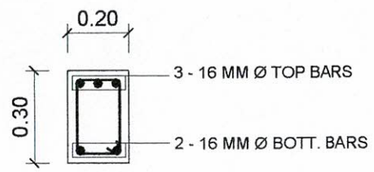

CB

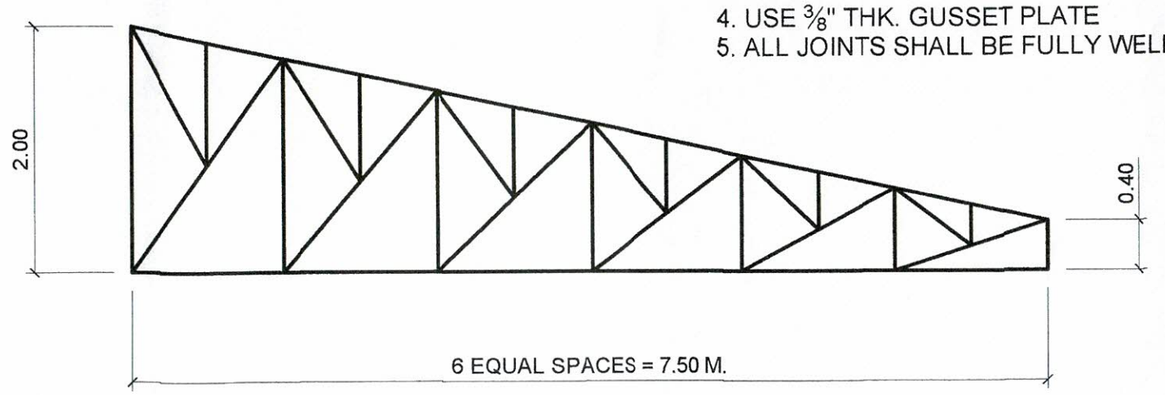

TRUSS DIAGRAM (HT - 1)

SCALE 1: 50 M.

PREPARED BY:

E. N. RODEROS JR.
PPU CEIT

STRUCTL. ENGR:	END USER:	ENDORSED BY:	REC APPROVAL:	APPROVED BY:	PROJECT TITLE / LOCATION:	IMPLEMENTING AGENCY:	SHT. NO.
M. BAGASBAS JR. DCE CEIT	D. L. ESPINELI DEAN SILANG CAMPUS	R. V. NUESTRO DEAN CEIT	H. D. ROBLES VPASS CVSU	D. C. CHAVEZ PRESIDENT CVSU	PROPOSED HRM HOSTEL CVSU SILANG CAMPUS	CAVITE STATE UNIVERSITY	S - 7

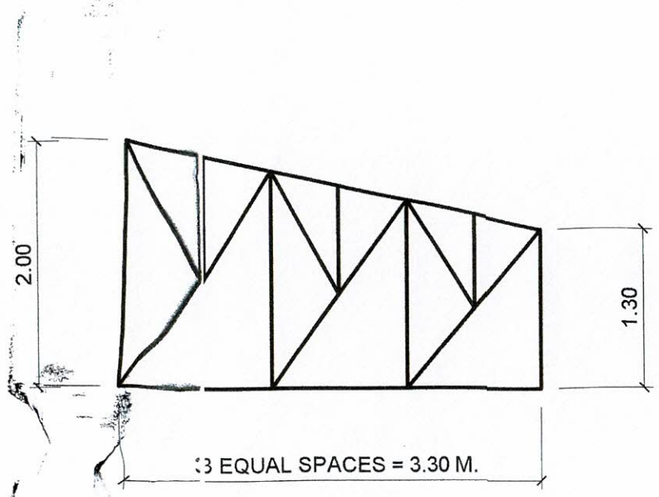

TRUSS (HT - 1A)

SCALE 1: 50 M.

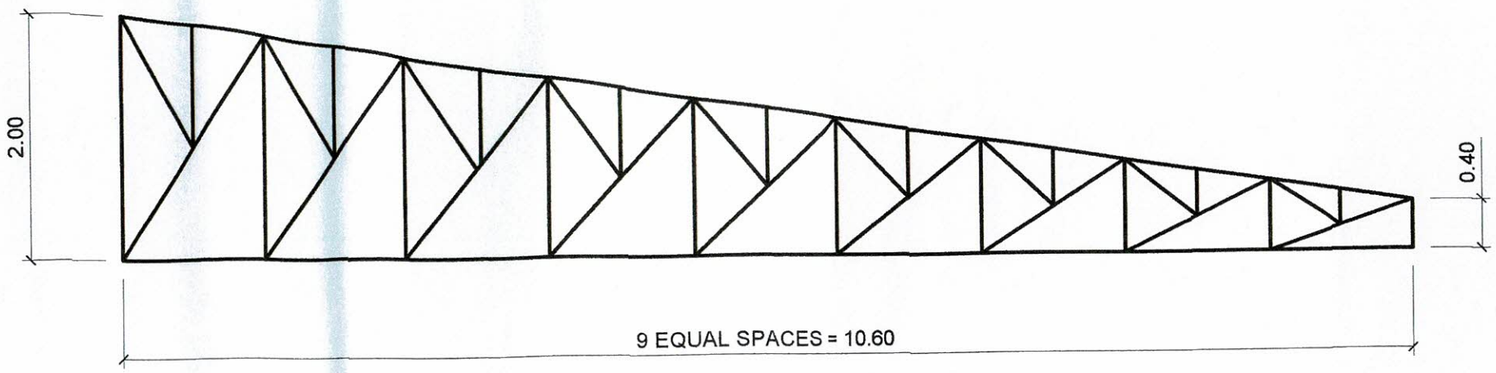

TRUSS (HT - 2)

SCALE 1: 50 M.

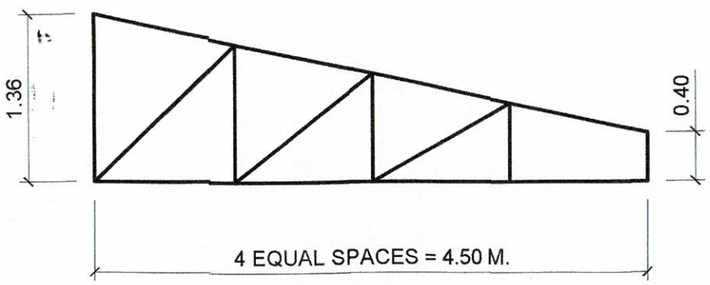

TRUSS (HT - 3)

SCALE 1: 50 M.

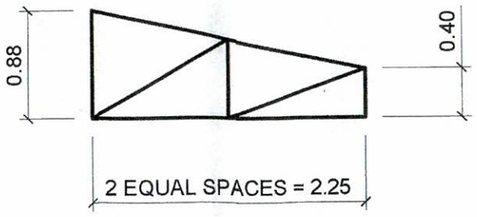

TRUSS (HT - 4)

SCALE 1: 50 M.

NOTE : FOR HT-3 & HT-4

1. USE 2 ½" X 2½" X ¼" ANGLE BARS FOR TOP CHORD AND BOTTOM CHORD

2. USE 2" X 2" X ¼" ANGLE BARS FOR WEB MEMBERS

2. USE 2"X 4" CEE PURLINS SP.@0.60 O.C.

3. USE ⅜" THK. GUSSET PLATE

4. ALL JOINTS SHALL BE FULLY WELDED

PREPARED BY:							
E. N. RODEROS JR. PPU CEIT							
STRUCTL. ENGR:	END USER:	ENDORSED BY:	REC APPROVAL:	APPROVED BY:	PROJECT TITLE / LOCATION:	IMPLEMENTING AGENCY:	SHT. NO.
M. BAGASDAS JR. DCE CEIT	D. L. ESPINELI DEAN SILANG CAMPUS	R. V. NUESTRO DEAN CEIT	H. D. ROBLES VPASS CVSU	D. C. CHAVEZ PRESIDENT CVSU	PROPOSED HRM HOSTEL CVSU SILANG CAMPUS	CAVITE STATE UNIVERSITY	S - 8

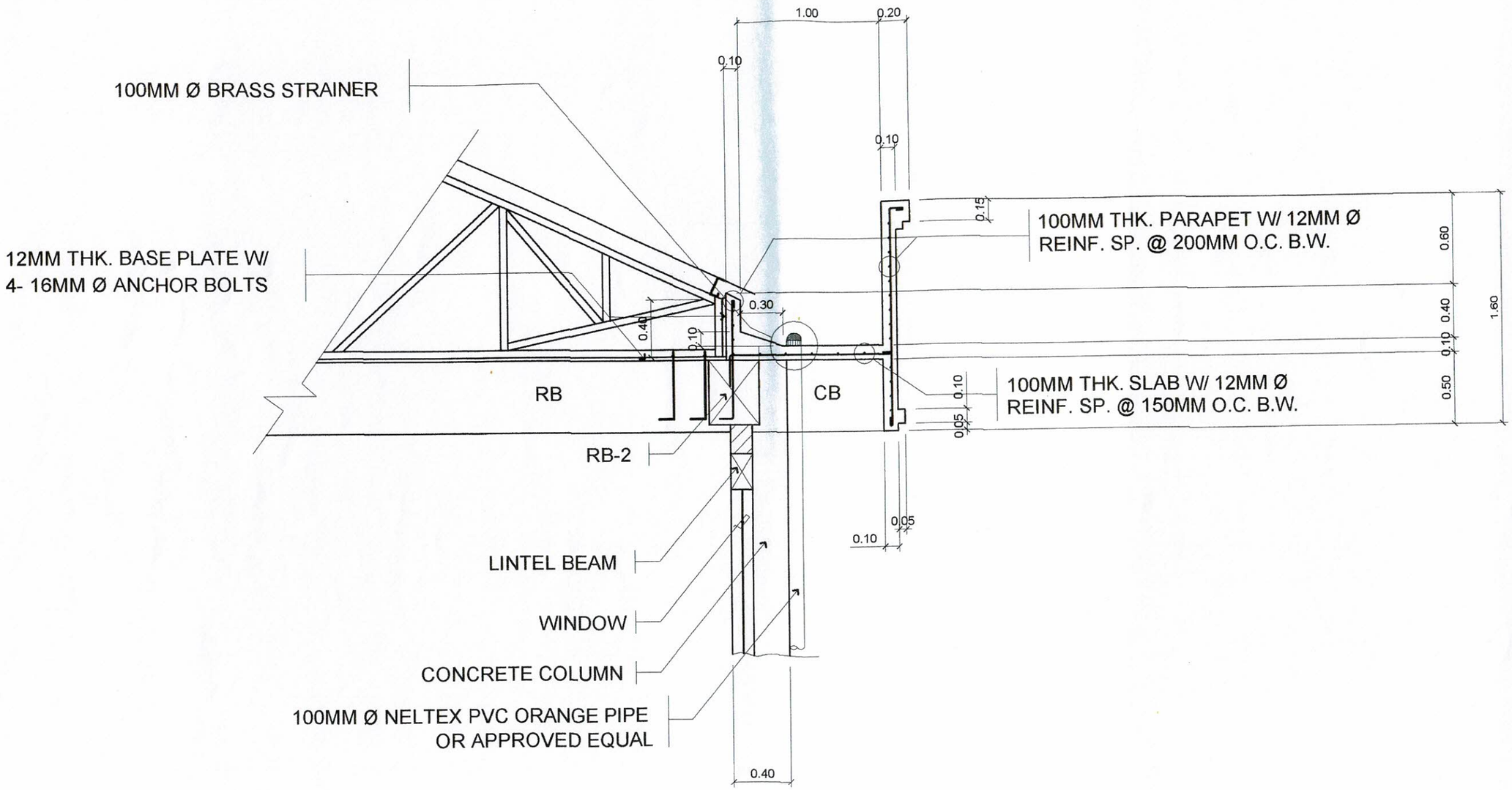

DETAIL OF CONCRETE GUTTER

SCALE 1 : 25 MTS

PREPARED BY:						
E. N. RODEROS JR. PPU CEIT						
STRUCTL. ENGR:	END USER:	ENDORSED BY:	REC APPROVAL:	APPROVED BY:	PROJECT TITLE / LOCATION:	IMPLEMENTING AGENCY:	SHT. NO.
M. BARGASDAS JR. DCE CEIT	D. L. ESPINELI DEAN SILANG CAMPUS	R. V. NUESTRO DEAN CEIT	H. D. ROBLES VPASS CVSU	D. C. CHAVEZ PRESIDENT CVSU	PROPOSED HRM HOSTEL CVSU SILANG CAMPUS	CAVITE STATE UNIVERSITY	S - 9

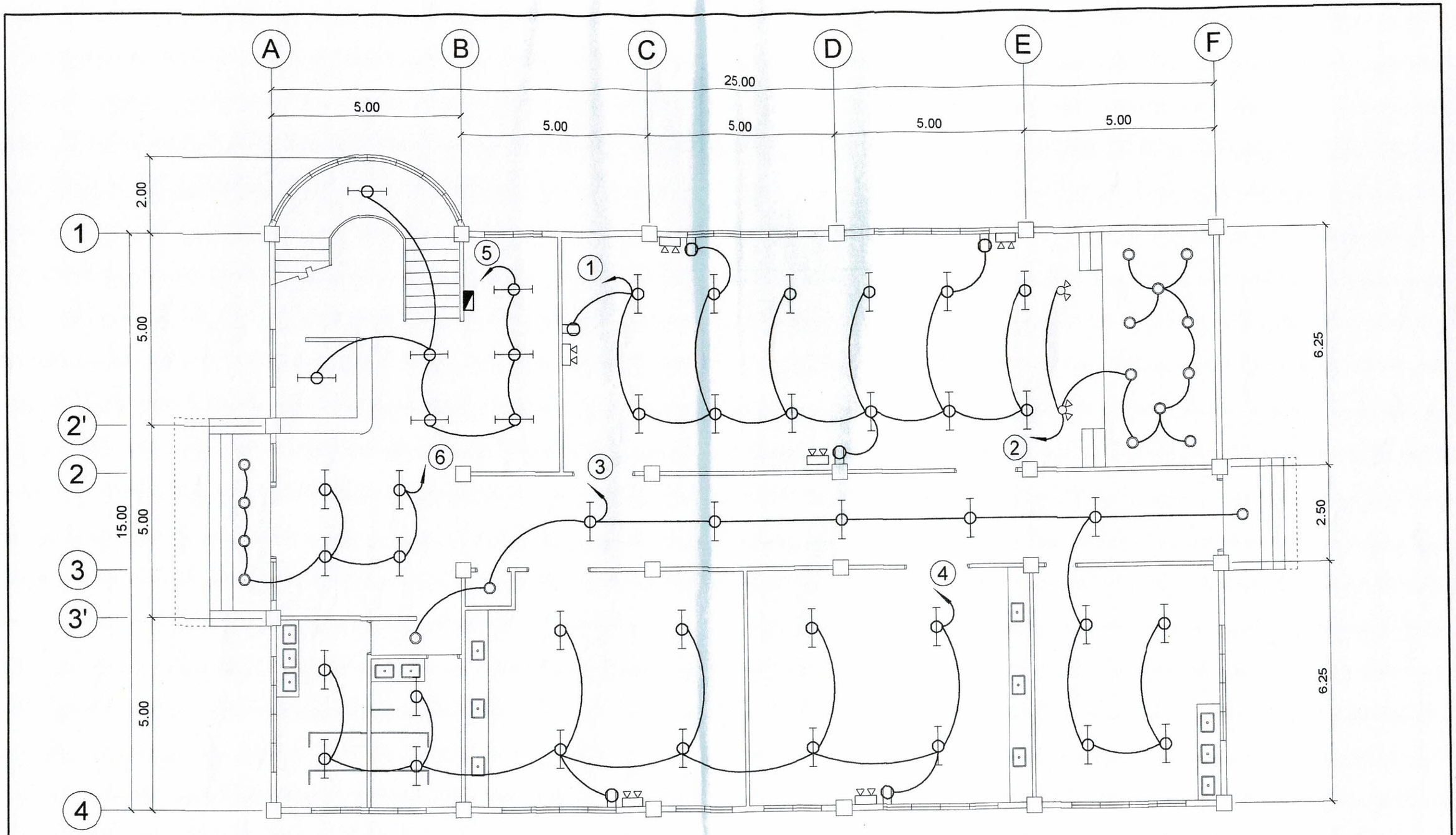

GROUND FLOOR LIGHTING LAYOUT

SCALE 1: 100 M.

PREPARED BY: E. N. RODEROS JR. PPU CEIT						
ELECTL. ENGR: RONALD P. PEÑA DCEE CEIT	END USER: D. L. ESPINELI DEAN SILANG CAMPUS	ENDORSED BY: R. V. NUESTRO DEAN CEIT	REC APPROVAL: H. D. ROBLES VPASS CVSU	APPROVED BY: D. C. CHAVEZ PRESIDENT CVSU	PROJECT TITLE / LOCATION: PROPOSED HRM HOSTEL CVSU SILANG CAMPUS	IMPLEMENTING AGENCY: CAVITE STATE UNIVERSITY	SHT. NO. E - 1

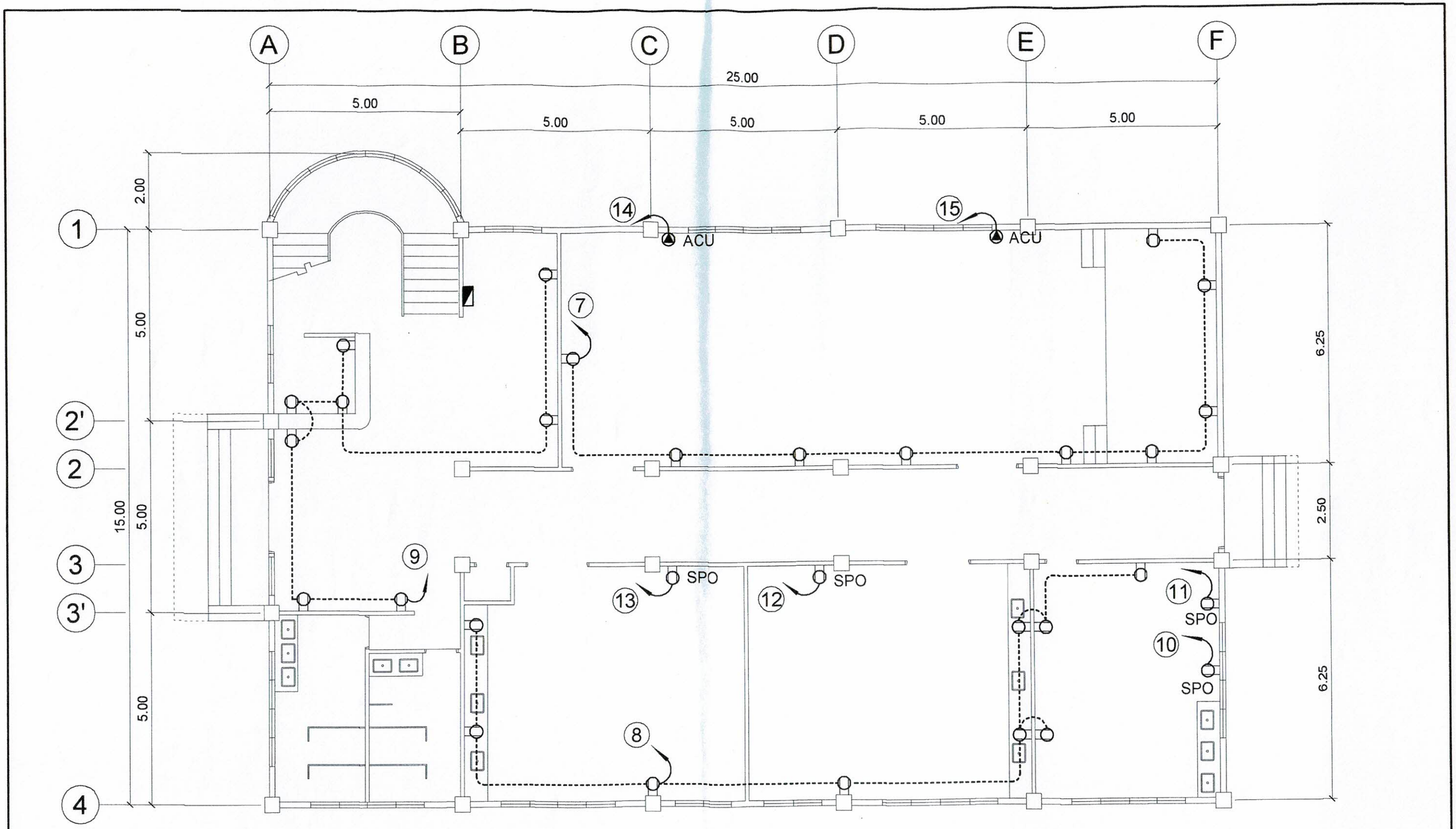

PREPARED BY:

E. N. RODEROS JR.
PPU CEIT

GROUND FLOOR POWER LAYOUT

SCALE 1: 100 M.

ELECTL. ENGR:	END USER:	ENDORSED BY:	REC APPROVAL:	APPROVED BY:	PROJECT TITLE / LOCATION:	IMPLEMENTING AGENCY:	SHT. NO.
RONALD P. PEÑA DCEE CEIT	D. L. ESPINELI DEAN SILANG CAMPUS	R. V. NUESTRO DEAN CEIT	H.D. ROBLES VPASS CVSU	D. C. CHAVEZ PRESIDENT CVSU	PROPOSED HRM HOSTEL CVSU SILANG CAMPUS	CAVITE STATE UNIVERSITY	E -2

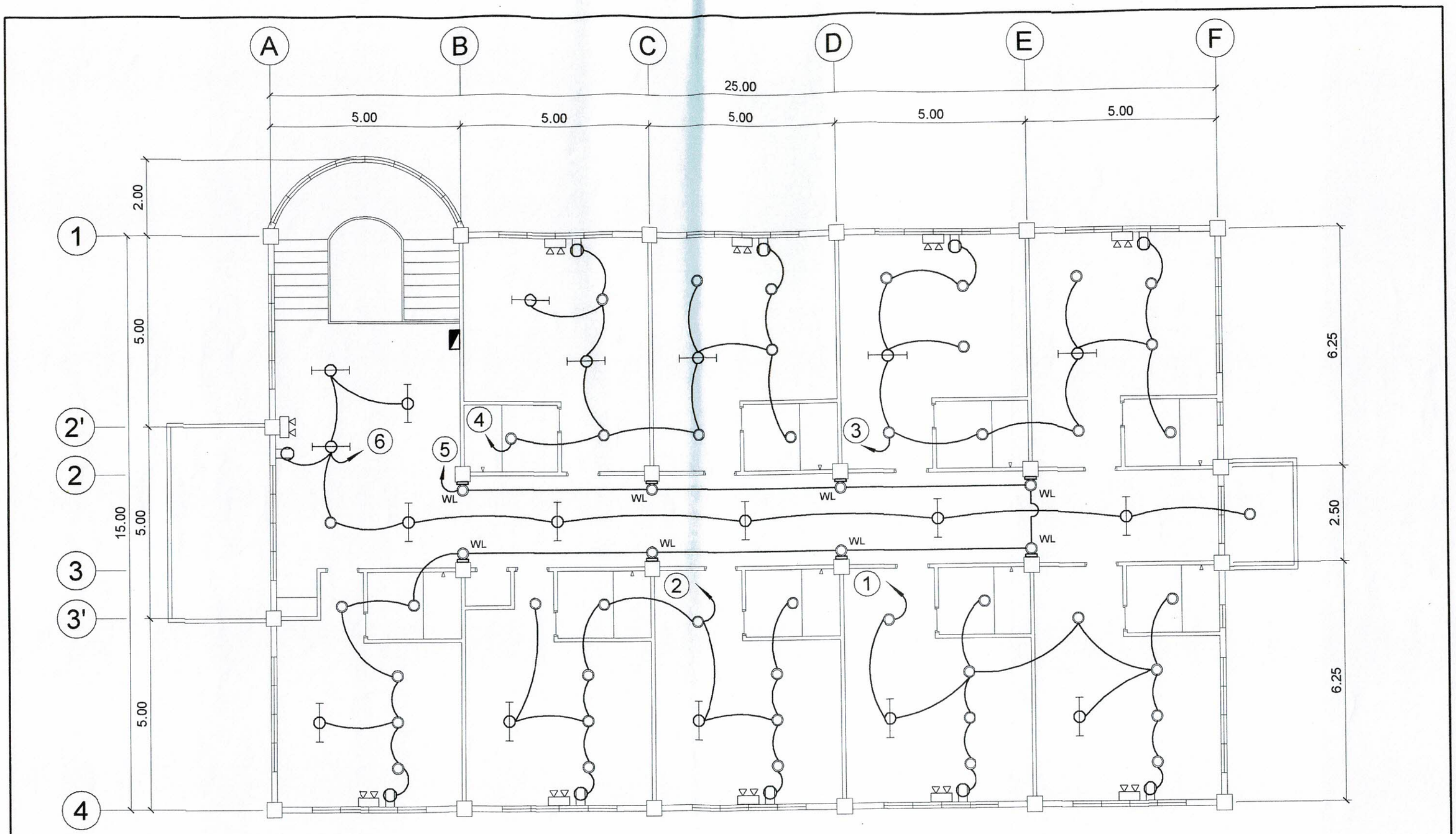

SECOND FLOOR
LIGHTING LAYOUT

SCALE 1: 100 M.

PREPARED BY:	ELECTL. ENGR:	END USER:	ENDORSED BY:	REC APPROVAL:	APPROVED BY:	PROJECT TITLE / LOCATION:	IMPLEMENTING AGENCY:	SHT. NO.
E. N. RODEROS JR. PPU CEIT	RONALD P. PEÑA DCEE CEIT	D. L. ESPINELI DEAN SILANG CAMPUS	R. V. NUESTRO DEAN CEIT	H. D. ROBLES VPASS CVSU	D. C. CHAVEZ PRESIDENT CVSU	PROPOSED HRM HOSTEL CVSU SILANG CAMPUS	CAVITE STATE UNIVERSITY	E - 3

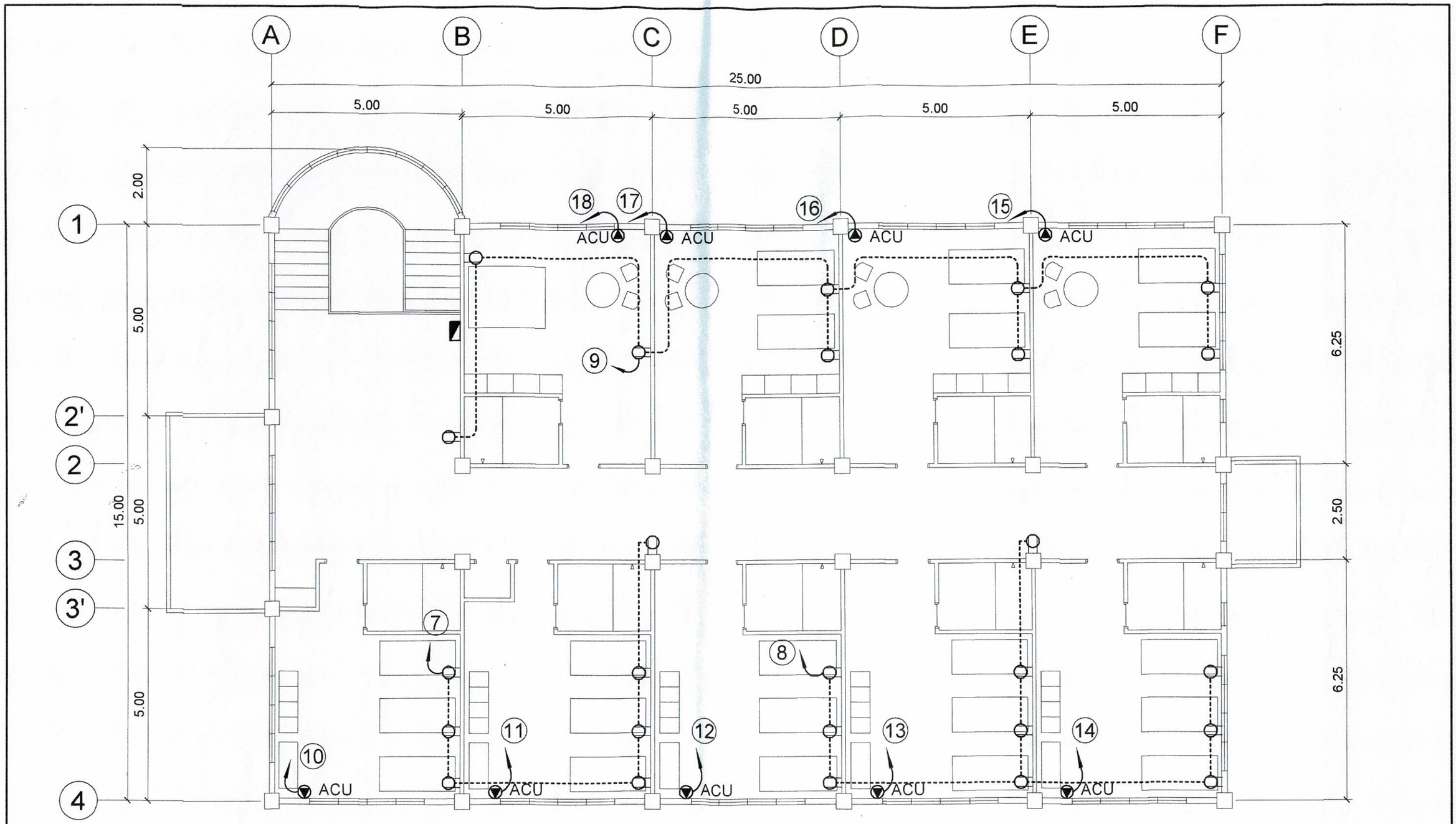

SECOND FLOOR
POWER LAYOUT

SCALE 1: 100 M.

PREPARED BY:	ELECTL. ENGR:	END USER:	ENDORSED BY:	REC APPROVAL:	APPROVED BY:	PROJECT TITLE / LOCATION:	IMPLEMENTING AGENCY:	SHT. NO.
E. N. RODEROS JR. PPU CEIT	RONALD P. PEÑA DCEE CEIT	D. L. ESPINELI DEAN SILANG CAMPUS	R. V. NUESTRO DEAN CEIT	H. D. ROBLES VPASS CVSU	D. C. CHAVEZ PRESIDENT CVSU	PROPOSED HRM HOSTEL CVSU SILANG CAMPUS	CAVITE STATE UNIVERSITY	E - 4

PANEL BOARD: LP1

Location : Proposed HRM Hostel CvSU Carmona Campus

3 - Phase 3 - Wire + Ground 230 volts surface mounted

Circuit No.	No. of Outlets	Load Description	S1	S2	S3	S3w	Rating of Load HP	Volts	Volt-Ampere AB	BC	CA	Size of Conductor MM2 THHN		MM2 THHN (G)	Size Of Conduit In MM Ø	Circuit Protection AT	AF	POLE	Type
1	16	Lighting Oultet						230	1600			2 - 2.0			20	15	100	2	B - ON
2	12	Lighting Oultet						230		1200		2 - 2.0			20	15	100	2	B - ON
3	12	Lighting Oultet						230			1200	2 - 2.0			20	15	100	2	B - ON
4	16	Lighting Oultet						230	1600			2 - 2.0			20	15	100	2	B - ON
5	7	Lighting Oultet						230		700		2 - 2.0			20	15	100	2	B - ON
6	8	Lighting Oultet						230	800			2 - 2.0			20	15	100	2	B - ON
7	9	Conv. Outlet						230		1800		2 - 3.5			20	20	100	2	B - ON
8	9	Conv. Outlet						230			1800	2 - 3.5			20	20	100	2	B - ON
9	8	Conv. Outlet						230	1600			2 - 3.5			20	20	100	2	B - ON
10	1	Special Purpose Outlet						230		1500		2 - 3.5	+	1 - 2.0	20	20	100	2	B - ON
11	1	Special Purpose Outlet						230			1500	2 - 3.5	+	1 - 2.0	20	20	100	2	B - ON
12	1	Special Purpose Outlet						230	1500			2 - 3.5	+	1 - 2.0	20	20	100	2	B - ON
13	1	Special Purpose Outlet						230	1500			2 - 3.5	+	1 - 2.0	20	20	100	2	B - ON
14	1	Split Type ACU						230			3500	2 - 5.5	+	1 - 2.0	20	40	100	2	B - ON
15	1	Split Type ACU						230		3500		2 - 5.5	+	1 - 2.0	20	40	100	2	B - ON
16		SPARE											+						
		TOTAL						230	8600	8700	8000	3 - 22 THHN	+	1- 8.0 THW	40	75	100	3	B - ON

FEEDER and CURRENT PROTECTION COMPUTATION:

$$I_{FL} = \frac{[\{(3 \times 8700)+(0.25 \times 3500)\}] \times DF}{230 \times 1.732} = 54.17 \text{ Amperes}$$

USE:

MAIN : 75 AT, 100AF, 240V, 3P CB, 20 KAIC, with solid neutral
FEEDER: 3 - 22 SQ. MM THHN + 1 - 8.0 SQ MM THW (G) in 40 MM dia IMC

SCHEDULE OF LOADS

PREPARED BY:	ELECTL. ENGR:	END USER:	ENDORSED BY:	REC APPROVAL:	APPROVED BY:	PROJECT TITLE / LOCATION:	IMPLEMENTING AGENCY:	SHT. NO.
E. N. RODEROS JR. PPU CEIT	RONALD P. PEÑA DCEE CEIT	D. L. ESPINELI DEAN SILANG CAMPUS	R. V. NUESTRO DEAN CEIT	H. D. ROBLES VPASS CVSU	D. C. CHAVEZ PRESIDENT CVSU	PROPOSED HRM HOSTEL CVSU SILANG CAMPUS	CAVITE STATE UNIVERSITY	E - 5

PANEL BOARD: LP2

Location : Proposed HRM Hostel CvSU Carmona Campus

3 - Phase 3 - Wire + Ground 230 volts surface mounted

Circuit No.	No. of Outlets	Load Description	S1	S2	S3	S3w	Rating of Load HP	Volts	Volt-Ampere AB	BC	CA	Size of Conductor MM2 THHN	MM2 THHN (G)	Size Of Conduit In MM Ø	Circuit Protection AT	AF	POLE	Type
1	14	Lighting Oultet						230	1400			2 - 2.0		20	15	100	2	B - ON
2	14	Lighting Oultet						230		1400		2 - 2.0		20	15	100	2	B - ON
3	14	Lighting Oultet						230			1400	2 - 2.0		20	15	100	2	B - ON
4	13	Lighting Oultet						230	1300			2 - 2.0		20	15	100	2	B - ON
5	15	Lighting Oultet						230		1500		2 - 2.0		20	15	100	2	B - ON
6	12	Lighting Oultet						230			1200	2 - 2.0		20	15	100	2	B - ON
7	7	Conv. Outlet						230	1400			2 - 3.5		20	20	100	2	B - ON
8	10	Conv. Outlet						230		2000		2 - 3.5		20	20	100	2	B - ON
9	9	Conv. Outlet						230			1800	2 - 3.5		20	20	100	2	B - ON
10	1	Room ACU						230	1500			2 - 3.5	+ 1 - 2.0	20	30	100	2	B - ON
11	1	Room ACU						230		1500		2 - 3.5	+ 1 - 2.0	20	30	100	2	B - ON
12	1	Room ACU						230			1500	2 - 3.5	+ 1 - 2.0	20	30	100	2	B - ON
13	1	Room ACU						230	1500			2 - 3.5	+ 1 - 2.0	20	30	100	2	B - ON
14	1	Room ACU						230		1500		2 - 5.5	+ 1 - 2.0	20	30	100	2	B - ON
15	1	Room ACU						230			1500	2 - 5.5	+ 1 - 2.0	20	30	100	2	B - ON
16	1	Room ACU						230	1500			2 - 5.5	+ 1 - 2.0	20	30	100	2	B - ON
17	1	Room ACU						230		1500		2 - 5.5	+ 1 - 2.0	20	30	100	2	B - ON
18	1	Room ACU						230			1500	2 - 5.5	+ 1 - 2.0	20	30	100	2	B - ON
19		SPARE																
20		SPARE											+					
		TOTAL						230	8600	9400	8900	3 - 22 THHN	+ 1- 8.0 THW	40	75	100	3	B - ON

FEEDER and CURRENT PROTECTION COMPUTATION:

$$I_{FL} = \frac{[\{(3 \times 9400)+(0.25 \times 1500)\}] \times DF}{230 \times 1.732} = 57.39 \text{ Amperes}$$

USE:

MAIN : 75 AT, 100AF, 240V, 3P CB, 20 KAIC, with solid neutral
FEEDER: 3 - 22 SQ. MM THHN + 1 - 8.0 SQ MM THW (G) in 40 MM dia IMC

SCHEDULE OF LOADS

PREPARED BY:	ELECTL. ENGR:	END USER:	ENDORSED BY:	REC APPROVAL:	APPROVED BY:	PROJECT TITLE / LOCATION:	IMPLEMENTING AGENCY:	SHT. NO.
E. N. RODEROS JR. PPU CEIT	RONALD P. PEÑA DCEE CEIT	D. L. ESPINELI DEAN SILANG CAMPUS	R. V. NUESTRO DEAN CEIT	H. D. ROBLES VPASS CVSU	D. C. CHAVEZ PRESIDENT CVSU	PROPOSED HRM HOSTEL CVSU SILANG CAMPUS	CAVITE STATE UNIVERSITY	E - 6

PANEL BOARD: MDP

Location : Proposed HRM Hostel CvSU Carmona Campus

3 - Phase 3 - Wire + Ground 230 volts surface mounted

Circuit No.	No. of Outlets	Load Description	Rating of Load						Size of Conductor		Size Of Conduit	Circuit Protection			
			∅	Volts	Volt-Ampere				MM2 THHN	MM2 THHN (G)	In MM Ø	AT	AF	POLE	Type
					3∅	AB	BC	CA							
1	LPG	LIGHTING AND POWER GROUND FLOOR		230		8600	8700	8000	3 - 22 THHN +	1- 8.0 THW	40	75	100	3	B - ON
2	LP2	LIGHTING AND POWER SECOND FLOOR		230		8600	9400	8900	3 - 22 THHN +	1- 8.0 THW	40	75	100	3	B - ON
3		SPARE													
4		SPARE													
		TOTAL		230		17200	18100	16900	3 - 30 THHN +	1- 14 THW	50	100	100	3	B - ON

FEEDER and CURRENT PROTECTION COMPUTATION:

$$I_{FL} = \frac{[(3 \times 18100)] \times DF}{230 \times 1.732} = 95.42 \text{ Amperes}$$

Transformer size : ***Kva = 30.22 kva*** ***use 3 - 15 kva single phase distribution transformer 13.8/240/120 volts***

USE:

MAIN : 100 AT, 100AF, 240V, 3P CB, 50 KAIC, w ith solid neutral

MAIN FEEDER: 3 - 30 SQ. MM THHN + 1 - 14 SQ MM THW (G) in 50 MM dia IMC

SCHEDULE OF LOADS

PREPARED BY:							
E. N. RODEROS JR. PPU CEIT							
ELECTL. ENGR:	END USER:	ENDORSED BY:	REC APPROVAL:	APPROVED BY:	PROJECT TITLE / LOCATION:	IMPLEMENTING AGENCY:	SHT. NO.
RONALD P. PEÑA DCEE CEIT	D. L. ESPINELI DEAN SILANG CAMPUS	R. V. NUESTRO DEAN CEIT	H. D. ROBLES VPASS CVSU	D. C. CHAVEZ PRESIDENT CVSU	PROPOSED HRM HOSTEL CVSU SILANG CAMPUS	CAVITE STATE UNIVERSITY	E - 7

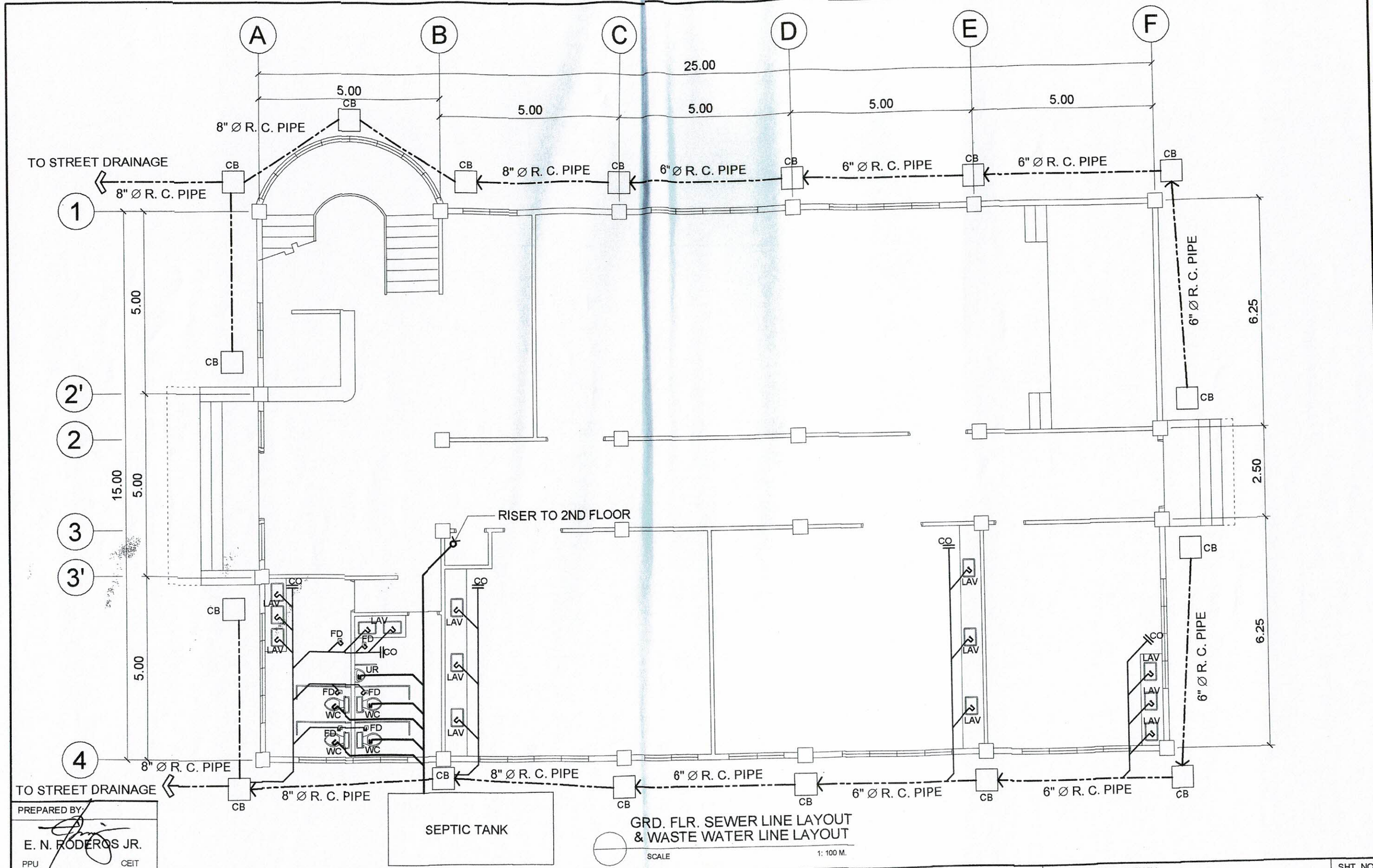

GRD. FLR. SEWER LINE LAYOUT & WASTE WATER LINE LAYOUT

SCALE 1: 100 M.

PREPARED BY: E. N. RODEROS JR. PPU CEIT						
REG. MASTER PLUMBER: S.B. BAYOT JR. PPU CEIT	END USER: D. L. ESPINELI DEAN SILANG CAMPUS	ENDORSED BY: R. V. NUESTRO DEAN CEIT	REC APPROVAL: H. D. ROBLES VPASS CVSU	APPROVED BY: D. C. CHAVEZ PRESIDENT CVSU	PROJECT TITLE / LOCATION: PROPOSED HRM HOSTEL CVSU SILANG CAMPUS	IMPLEMENTING AGENCY: CAVITE STATE UNIVERSITY	SHT. NO. P-1

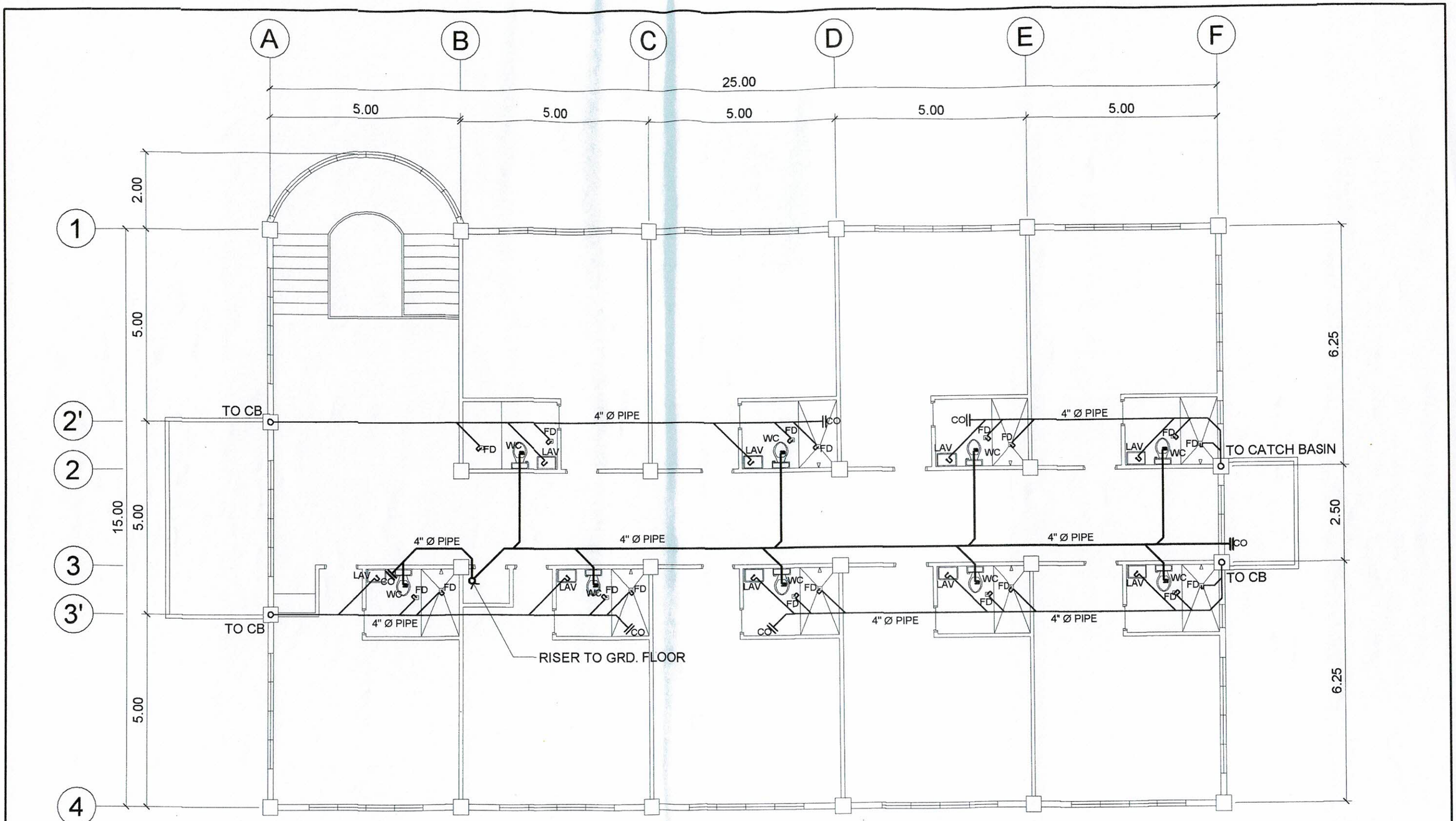

2ND. FLR. SEWER LINE LAYOUT
& WASTE WATER LINE LAYOUT

SCALE 1: 100 M.

PREPARED BY:							
E. N. RODEROS JR. PPU CEIT							
REG. MASTER PLUMBER:	END USER:	ENDORSED BY:	REC APPROVAL:	APPROVED BY:	PROJECT TITLE / LOCATION:	IMPLEMENTING AGENCY:	SHT. NO.
S.B. BAYOT JR. PPU CEIT	D. L. ESPINELI DEAN SILANG CAMPUS	R. V. NUESTRO DEAN CEIT	H. D. ROBLES VPASS CVSU	D. C. CHAVEZ PRESIDENT CVSU	PROPOSED HRM HOSTEL CVSU SILANG CAMPUS	CAVITE STATE UNIVERSITY	P-2

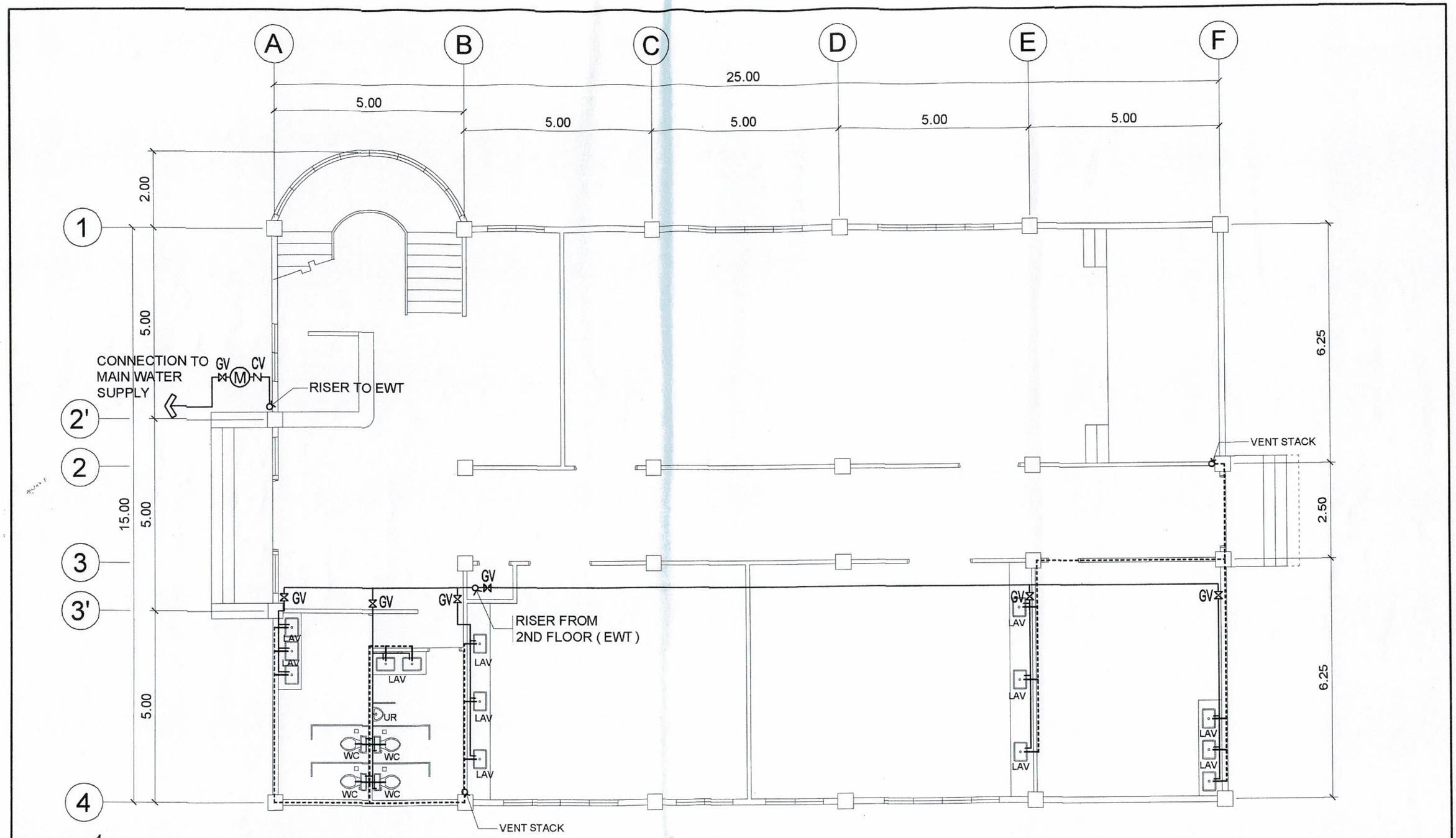

GRD. FLR. WATER SUPPLY AND VENTILLATION LAYOUT

SCALE 1: 100 M.

PREPARED BY:						
E. N. RODEROS JR. PPU CEIT						
REG. MASTER PLUMBER:	END USER:	ENDORSED BY:	REC APPROVAL:	APPROVED BY:	PROJECT TITLE / LOCATION:	IMPLEMENTING AGENCY:	SHT. NO.
S.B. BAYOT JR. PPU CEIT	D. L. ESPINELI DEAN SILANG CAMPUS	R. V. NUESTRO DEAN CEIT	H. D. ROBLES VPASS CVSU	D. C. CHAVEZ PRESIDENT CVSU	PROPOSED HRM HOSTEL CVSU SILANG CAMPUS	CAVITE STATE UNIVERSITY	P- 3

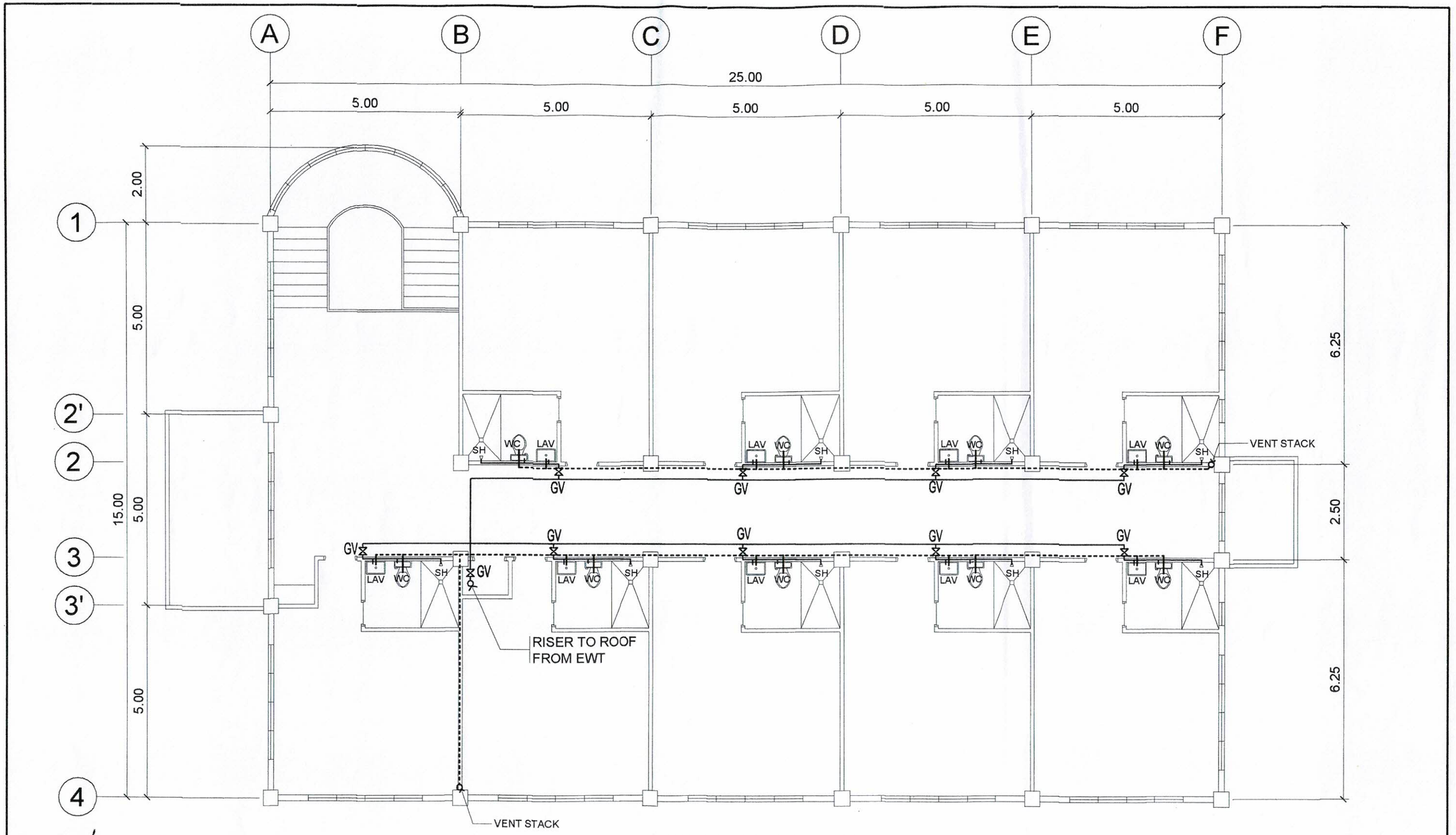

2ND. FLR. WATER SUPPLY
AND VENTILLATION LAYOUT

SCALE 1: 100 M.

PREPARED BY:	REG. MASTER PLUMBER:	END USER:	ENDORSED BY:	REC APPROVAL:	APPROVED BY:	PROJECT TITLE / LOCATION:	IMPLEMENTING AGENCY:	SHT. NO.
E. N. RODEROS JR. PPU CEIT	S.B. BAYOT JR. PPU CEIT	D. L. ESPINELI DEAN SILANG CAMPUS	R. V. NUESTRO DEAN CEIT	H. D. ROBLES VPASS CVSU	D. C. CHAVEZ PRESIDENT CVSU	PROPOSED HRM HOSTEL CVSU SARMIENTO CAMPUS	CAVITE STATE UNIVERSITY	P- 4

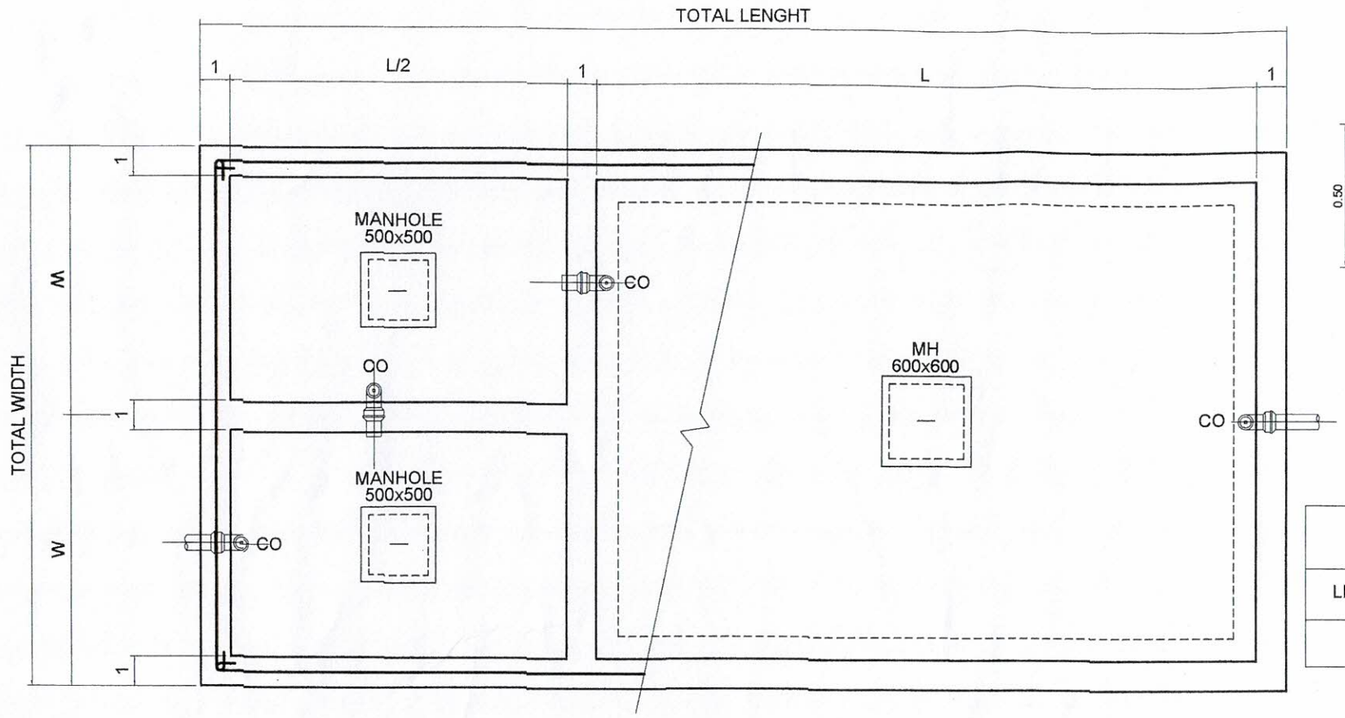

PLAN

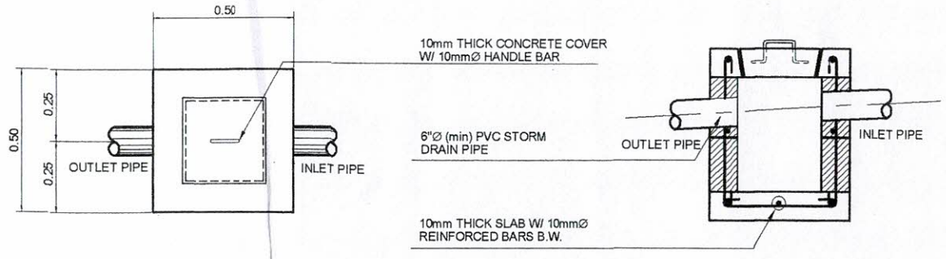

CATCH BASIN/ JUNCTION BOX DETAIL

SCALE NTS.

SEPTIC TANK DIMENSION					
LENGTH (L)	L/2	TOTAL LENGTH	WIDTH (W)	TOTAL WIDTH	DEPTH (D)
3.30	1.65	4.95 M	1000 MM	2000 MM	1800 MM

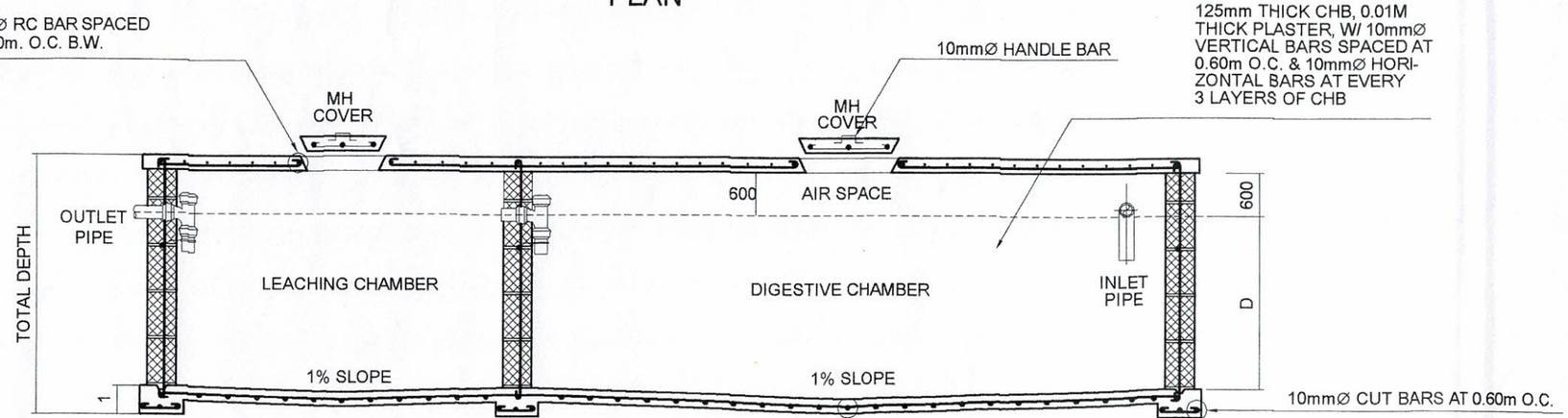

SECTION

DETAIL OF SEPTIC TANK

SCALE NTS.

PREPARED BY:	REG. MASTER PLUMBER:	END USER:	ENDORSED BY:	REC APPROVAL:	APPROVED BY:	PROJECT TITLE / LOCATION:	IMPLEMENTING AGENCY:	SHT. NO.
E. N. RODEROS JR. PPU CEIT	S.B. BAYOT JR. PPU CEIT	D. L. ESPINELI DEAN SILANG CAMPUS	R. V. NUESTRO DEAN CEIT	H. D. ROBLES VPASS CVSU	D. C. CHAVEZ PRESIDENT CVSU	PROPOSED HRM HOSTEL CVSU SILANG CAMPUS	CAVITE STATE UNIVERSITY	P- 5